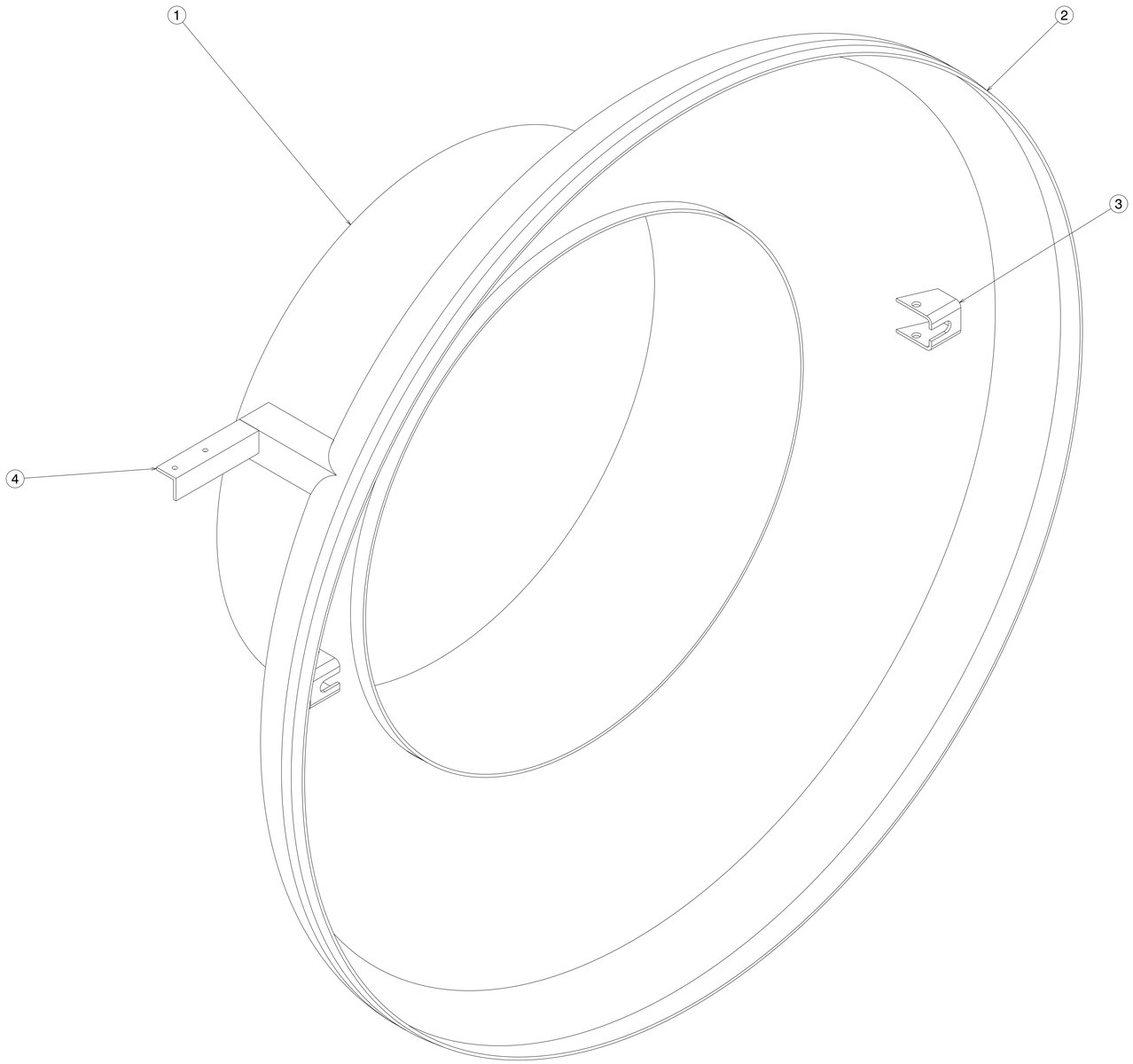

3 HEAD/NOZZLE LEFT

PART NO.	QUANTITY	PART NAME	MATERIAL	REFERENCE DWG NO.	REMARK
4	01	PIPE BRACKET	SS304L	VCP01-008-R1/SHEET-02	-
3	02	HANGING TOE MOUNT	SS304L	VCP01-008-R1/SHEET-02	-
2	01	REDUCER SHELL	SS304L	VCP01-008-R1/SHEET-02	-
1	01	CYLINDRICAL SHELL	SS304L	VCP01-008-R1/SHEET-02	-

MATERIAL: ▽ 8-25 ▽▽ 1.6-8 ▽▽▽ 0.025-1.6 ▽▽▽▽ < 0.025

CO-ORDINATED BY

MACHINING DEVIATIONS FOR NON-TOLERANCED DIMENSIONS

LENGTH IN mm OF SHORTER SIDE OF ANGLES				LENGTH OR DIA	UPTO 6	6-30	30-120	120-315
UPTO 10	10-50	50-120	OVER 120-400					
±1'	±0°-30'	±0°-20'	±0°-10'		±0.1	±0.2	±0.3	±0.5

REVISION COLUMN

REV	ZONE	DESCRIPTION	DATE	REMARKS	APPROVED BY

MED — SIZE A1

ALL DIMENSIONS ARE IN 'mm' UNLESS OTHERWISE STATED

INSTITUTE FOR PLASMA RESEARCH (LIGO-INDIA) BHAT, GANDHINAGAR-382 428.

SCALE	AS NOTED	DATE	
DRAWN	S.P.P.	05/07/2015	
DESIGNED	R.K.		
APPROVED	M.K.G.		

THIRD ANGLE PROJECTION

TITLE HEAD/NOZZLE LEFT

REF DRG NO: VCP01-001-R1 REV R1

DRG.NO VCP01-008-R1 SHEET 01 OF 02

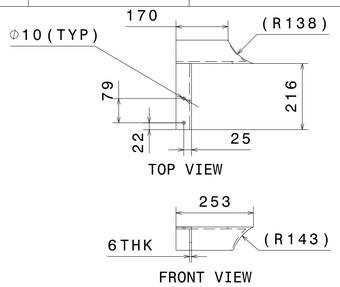

4 PIPE BRACKET
SCALE-1:10

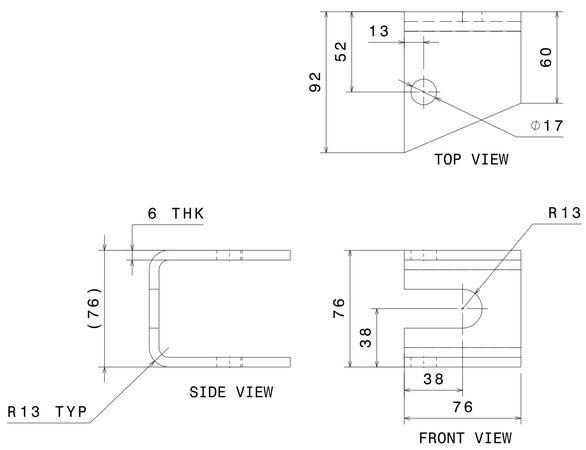

ISOMETRIC VIEW
SCALE-1:5

3 HANGING TOE MOUNT
SCALE-1:2

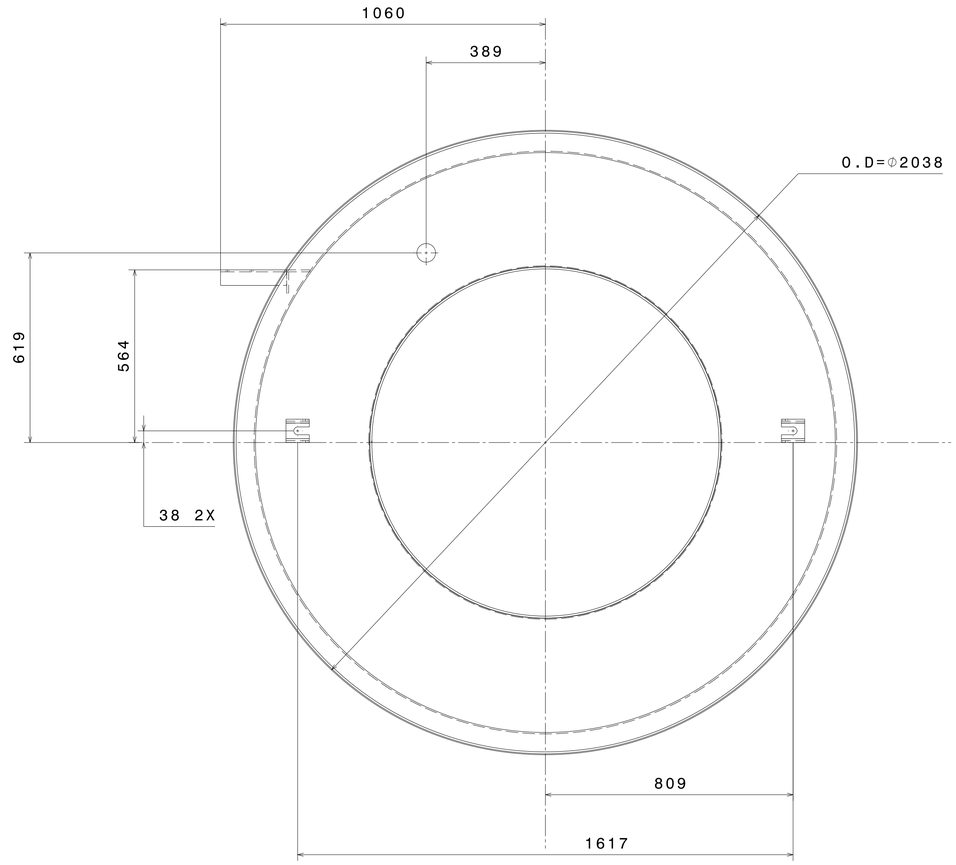

ASSEMBLY DIMENSIONS
SCALE-1:10

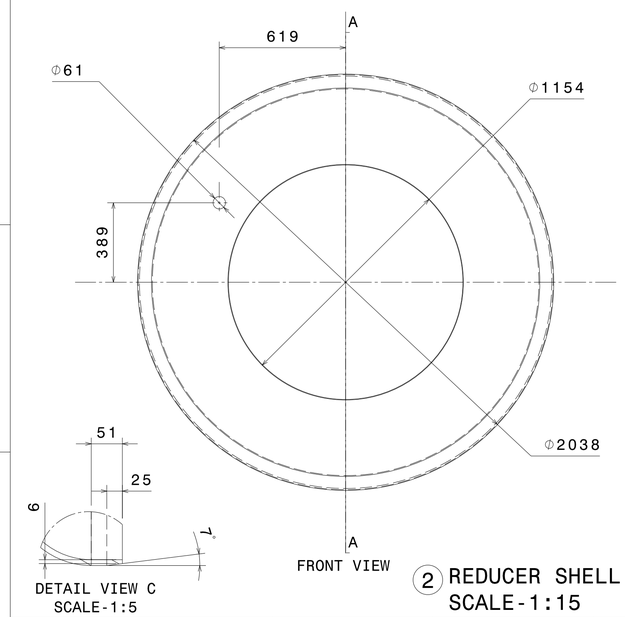

DETAIL VIEW C
SCALE-1:5

2 REDUCER SHELL
SCALE-1:15

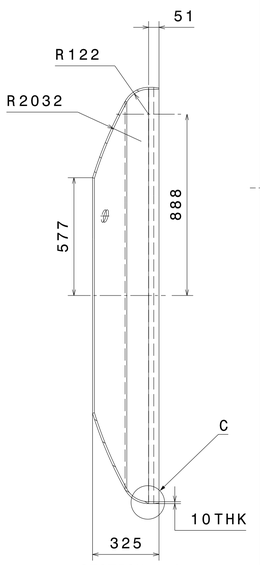

SECTION A-A

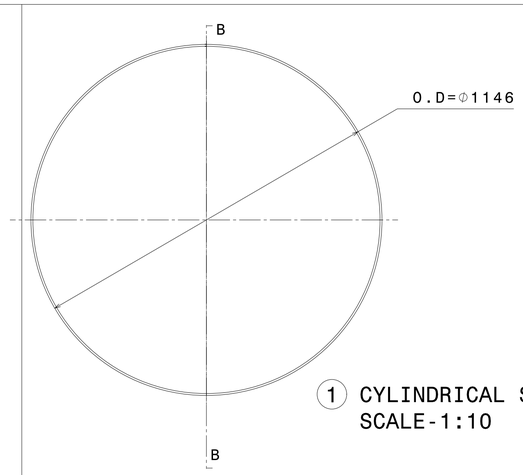

FRONT VIEW

1 CYLINDRICAL SHELL
SCALE-1:10

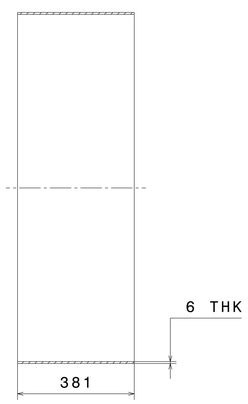

SECTION B-B

MATERIAL:		▽ 8-25		▽▽ 1.6-8		▽▽▽ 0.025-1.6		▽▽▽▽ < 0.025		REVISION COLUMN						MED	SIZE A1	INSTITUTE FOR PLASMA RESEARCH (LIGO-INDIA) BHAT, GANDHINAGAR-382 428.	
CO-ORDINATED BY										REV	ZONE	DESCRIPTION	DATE	REMARKS	APPROVED BY	ALL DIMENSIONS ARE IN mm UNLESS OTHERWISE STATED			
MACHINING DEVIATIONS FOR NON-TOLERANCED DIMENSIONS																SCALE	AS NOTED	DATE	TITLE HEAD/NOZZLE LEFT
LENGTH IN mm OF SHORTER SIDE OF ANGLES					LENGTH OR DIA	UPTO 6	6-30	30-120	120-315							DRAWN	S.P.P.	05/07/2015	THIRD ANGLE PROJECTION
UPTO 10	10-50	50-120	OVER 120-400													DESIGNED	R.K.		REF DRG NO: VCP01-001-R1 REV R1
±1'	±0°-30'	±0°-20'	±0°-10'			±0.1	±0.2	±0.3	±0.5							APPROVED	M.K.G.		DRG.NO VCP01-008-R1 SHEET 02 OF 02

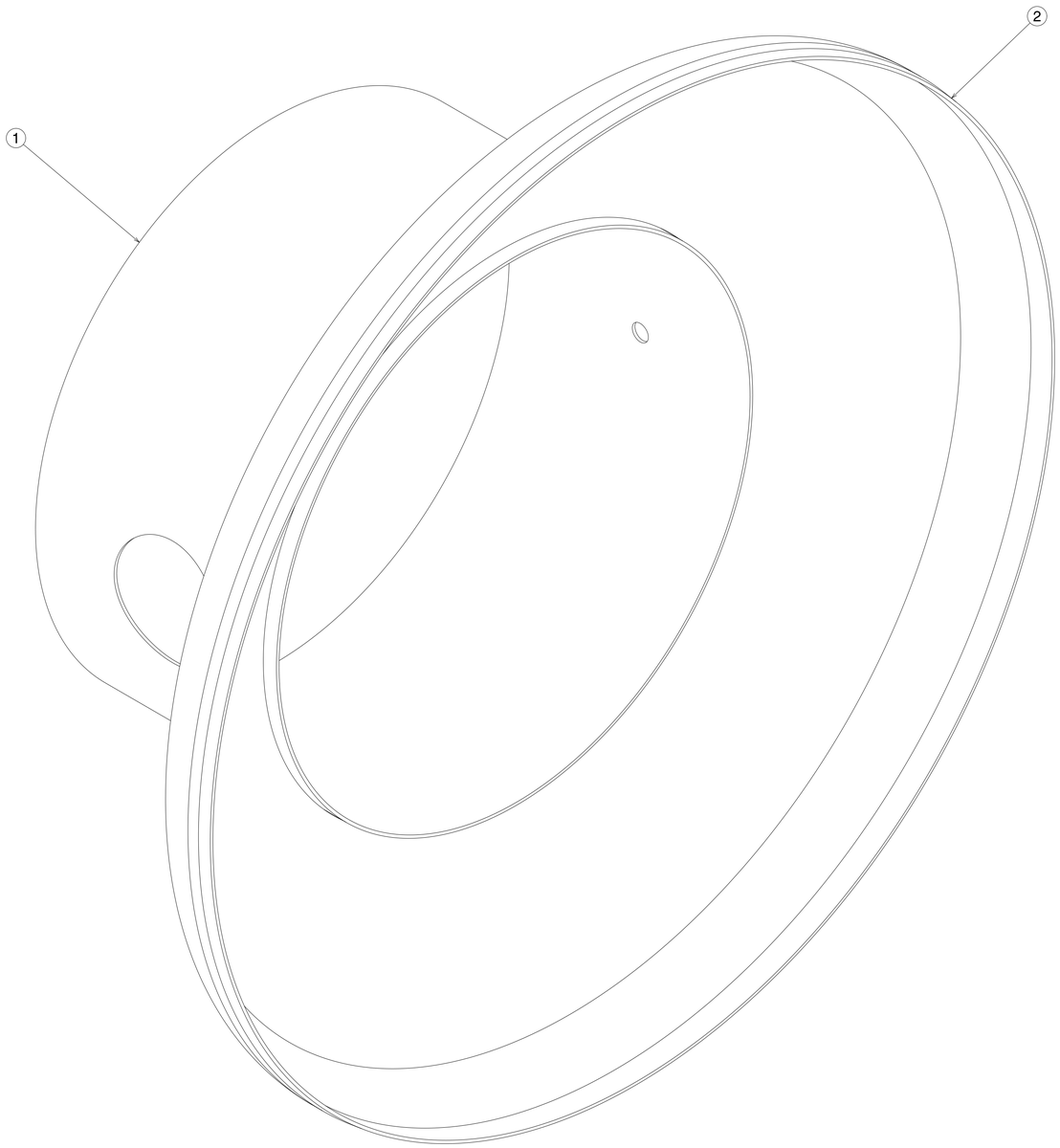

4 HEAD/NOZZLE RIGHT

PART NO.	QUANTITY	PART NAME	MATERIAL	REFERENCE DWG NO.	REMARK
2	01	REDUCER SHELL	SS304L	VCP01-009-R1/SHEET-02	-
1	01	CYLINDRICAL SHELL	SS304L	VCP01-009-R1/SHEET-02	-

MATERIAL:	▽ 8-25	▽▽ 1.6-8	▽▽▽ 0.025-1.6	▽▽▽▽ < 0.025			
CO-ORDINATED BY							
MACHINING DEVIATIONS FOR NON-TOLERANCED DIMENSIONS							
LENGTH IN mm OF SHORTER SIDE OF ANGLES				LENGTH OR DIA	UPTO 6	6-30	30-120	120-315
UPTO 10	10-50	50-120	OVER 120-400					
±1'	±0'-30'	±0'-20'	±0'-10'		±0.1	±0.2	±0.3	±0.5

REVISION COLUMN					
REV	ZONE	DESCRIPTION	DATE	REMARKS	APPROVED BY

MED	SIZE A1	INSTITUTE FOR PLASMA RESEARCH (LIGO-INDIA) BHAT, GANDHINAGAR-382 428.	
ALL DIMENSIONS ARE IN 'mm' UNLESS OTHERWISE STATED			
SCALE	AS NOTED	DATE	TITLE HEAD/NOZZLE RIGHT
DRAWN	S.P.P.	05/07/2015	THIRD ANGLE PROJECTION
DESIGNED	R.K.	REF DRG NO: VCP01-001-R1	REV R1
APPROVED	M.K.G.	DRG.NO VCP01-009-R1	SHEET 01 OF 02

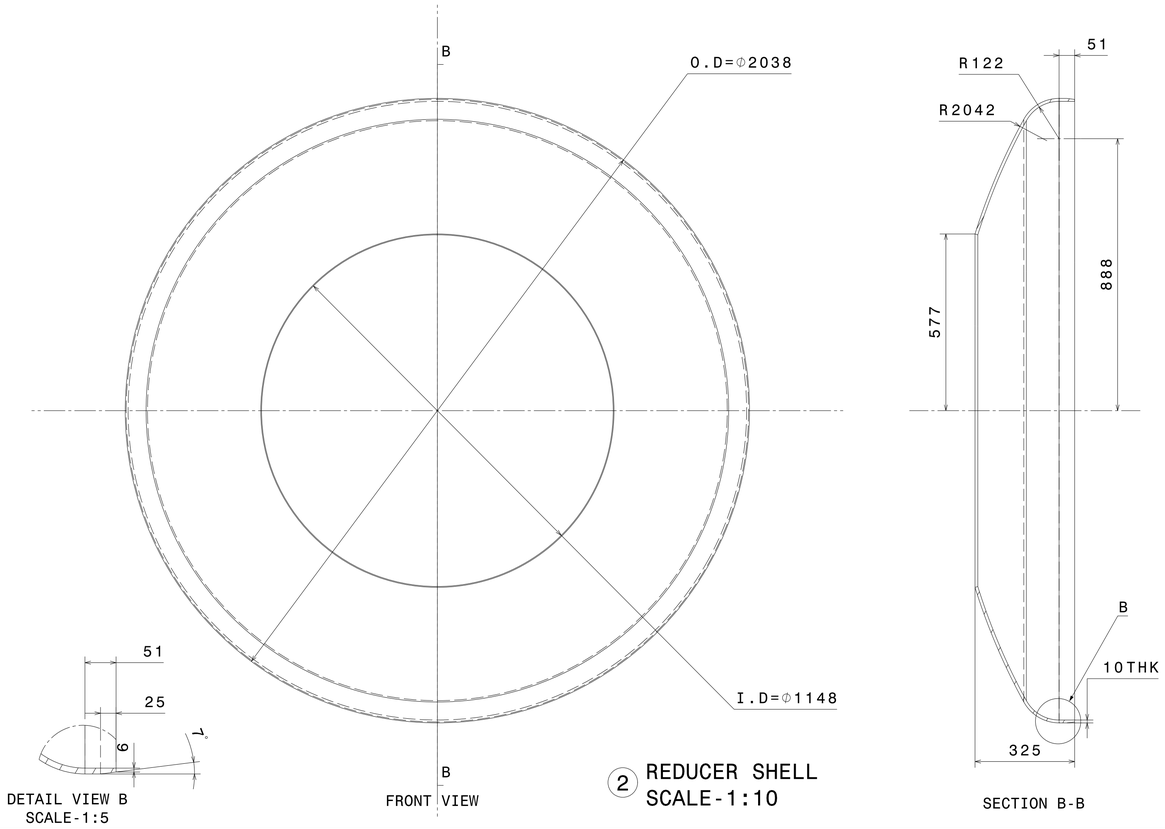

2 REDUCER SHELL
SCALE-1:10

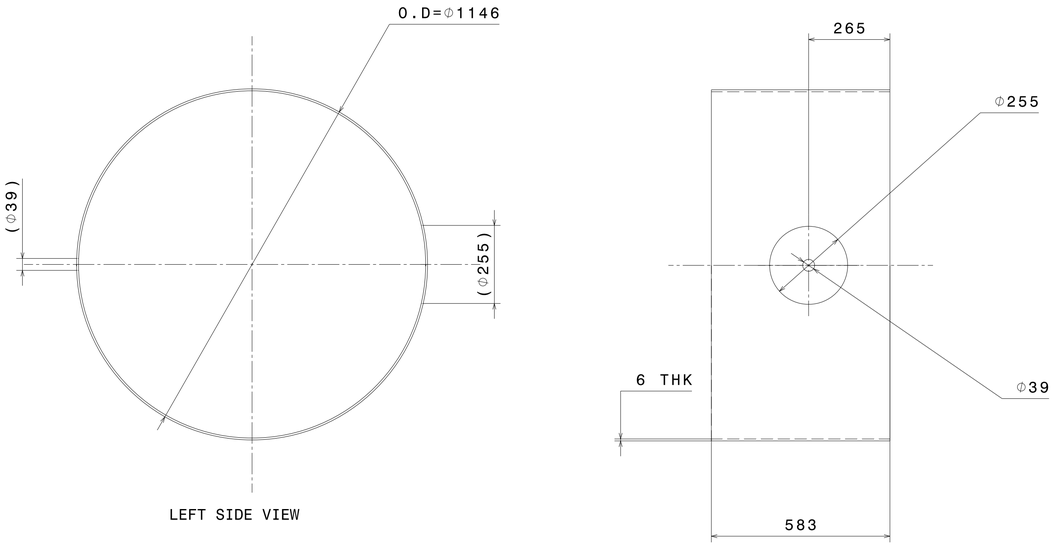

1 CYLINDRICAL SHELL
SCALE-1:10

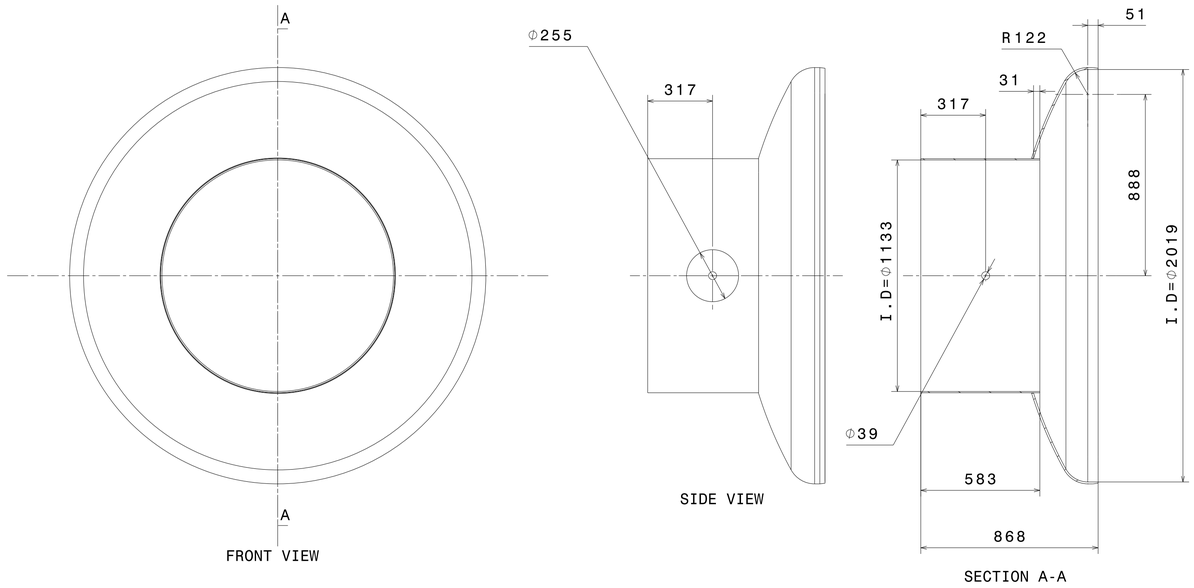

ASSEMBLY DIMENSION
SCALE-1:15

MATERIAL:	▽ 8-25	▽▽ 1.6-8	▽▽▽ 0.025-1.6	▽▽▽▽ < 0.025
CO-ORDINATED BY				

MACHINING DEVIATIONS FOR NON-TOLERANCED DIMENSIONS

LENGTH IN mm OF SHORTER SIDE OF ANGLES				LENGTH OR DIA	UPTO 6	6-30	30-120	120-315
UPTO 10	10-50	50-120	OVER 120-400					
±1°	±0°-30'	±0°-20'	±0°-10'		±0.1	±0.2	±0.3	±0.5

REVISION COLUMN					
REV	ZONE	DESCRIPTION	DATE	REMARKS	APPROVED BY

MED		SIZE A1
ALL DIMENSIONS ARE IN 'mm' UNLESS OTHERWISE STATED		
SCALE	AS NOTED	DATE
DRAWN	S.P.P.	05/07/2015
DESIGNED	R.K.	
APPROVED	M.K.G.	

THIRD ANGLE PROJECTION

INSTITUTE FOR PLASMA RESEARCH
(LIGO-INDIA)
BHAT, GANDHINAGAR-382 428.

TITLE HEAD/NOZZLE RIGHT

REF DRG NO: VCP01-001-R1 REV R1

DRG.NO VCP01-009-R1 SHEET 02 OF 02

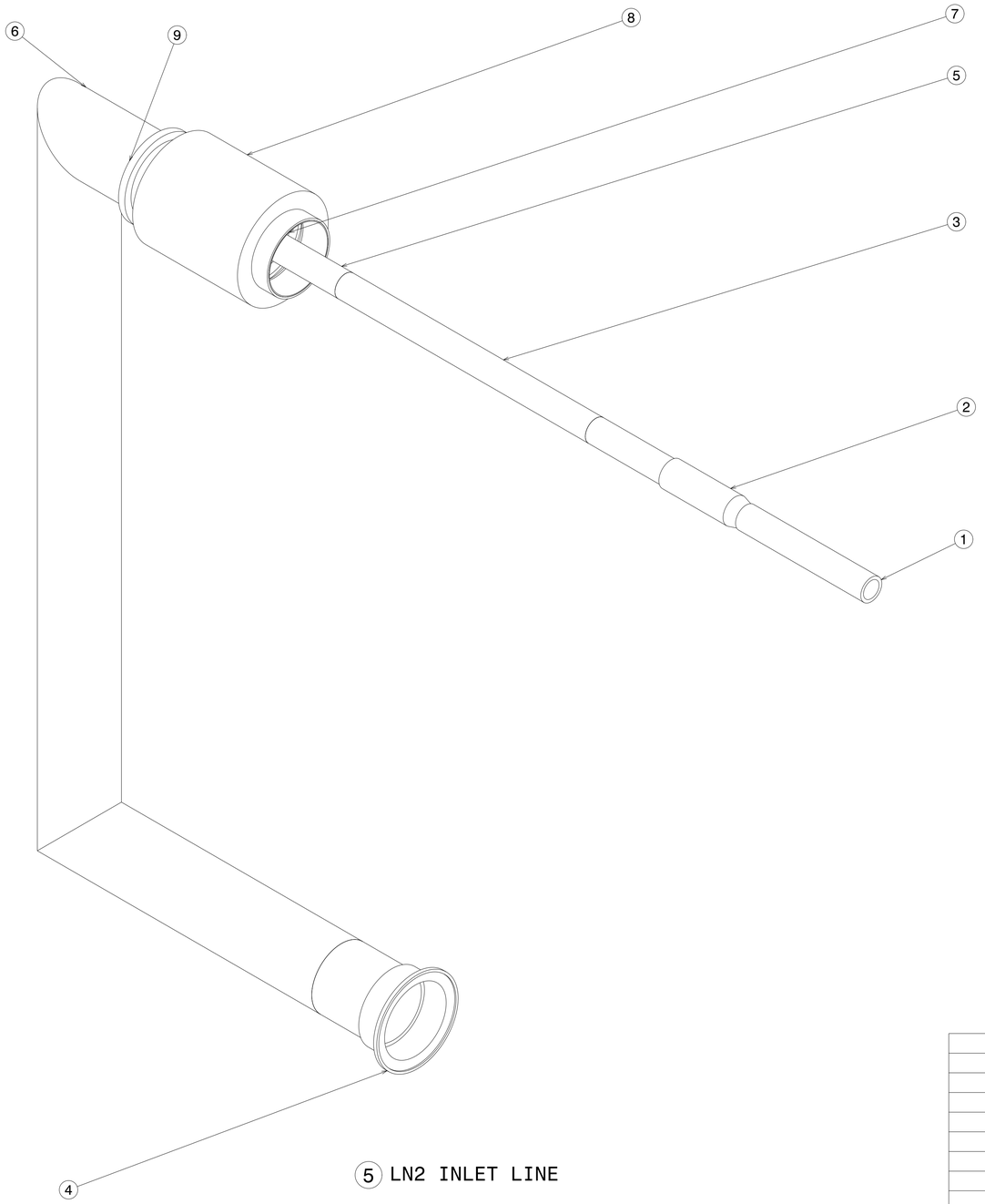

5 LN2 INLET LINE

PART NO.	QUANTITY	PART NAME	MATERIAL	REFERENCE DWG NO.	REMARK
9	01	CONNECTOR	SS304L	VCP01-010-R1/SHEET-03	-
8	01	BELLOW COVER	SS304L	VCP01-010-R1/SHEET-03	-
7	01	BELLOW	SS304L	VCP01-010-R1/SHEET-03	-
6	01	TUBE COVER	SS304L	VCP01-010-R1/SHEET-03	-
5	01	TUBE	SS304L	VCP01-010-R1/SHEET-02	-
4	01	FEMALE BAYONET	SS304L	VCP01-010-R1/SHEET-02	-
3	01	SS TUBE	SS304L	VCP01-010-R1/SHEET-02	-
2	01	ALU SS TUBE	ALU-SS304L	VCP01-010-R1/SHEET-02	-
1	01	ALU TUBE	ALUMINIUM	VCP01-010-R1/SHEET-02	-

MATERIAL:	▽ 8-25	▽▽ 1.6-8	▽▽▽ 0.025-1.6	▽▽▽▽ < 0.025
CO-ORDINATED BY				

MACHINING DEVIATIONS FOR NON-TOLERANCED DIMENSIONS

LENGTH IN mm OF SHORTER SIDE OF ANGLES				LENGTH OR DIA	UPTO 6	6-30	30-120	120-315
UPTO 10	10-50	50-120	OVER 120-400					
±1'	±0°-30'	±0°-20'	±0°-10'		±0.1	±0.2	±0.3	±0.5

REV	ZONE	DESCRIPTION	DATE	REMARKS	APPROVED BY

MED	SIZE A1	
ALL DIMENSIONS ARE IN mm UNLESS OTHERWISE STATED		
SCALE	1:2	DATE
DRAWN	S.P.P.	05/07/2015
CHECKED	R.K.	
APPROVED	M.K.G.	

THIRD ANGLE PROJECTION

INSTITUTE FOR PLASMA RESEARCH
(LIGO-INDIA)
BHAT, GANDHINAGAR-382 428.

TITLE
LN2 INLET LINE

REF DRG NO: VCP01-001-R1 REV R1

DRG.NO VCP01-010-R1 SHEET 01 OF 03

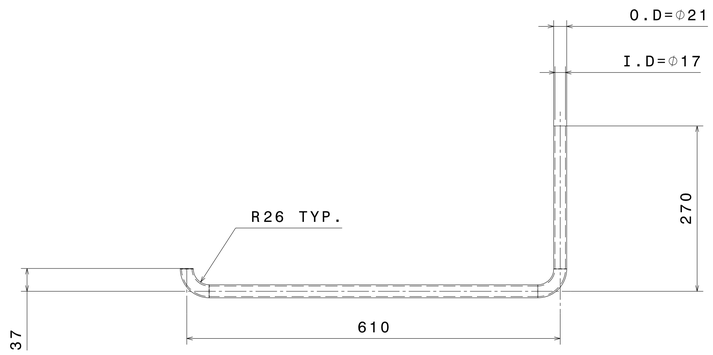

FRONT VIEW

5 TUBE
SCALE-1:5

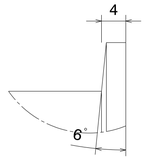

DETAIL VIEW E
SCALE-2:1

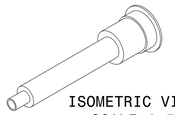

ISOMETRIC VIEW
SCALE-1:5

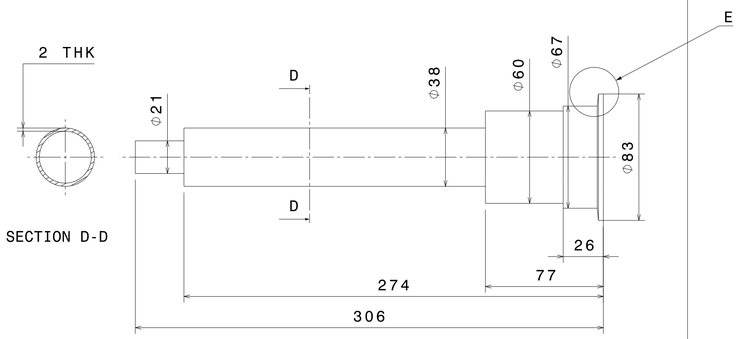

SECTION D-D

FRONT VIEW

4 FEMALE BAYONET
SCALE-1:2

ASSEMBLY DIMENSION
SCALE-1:2

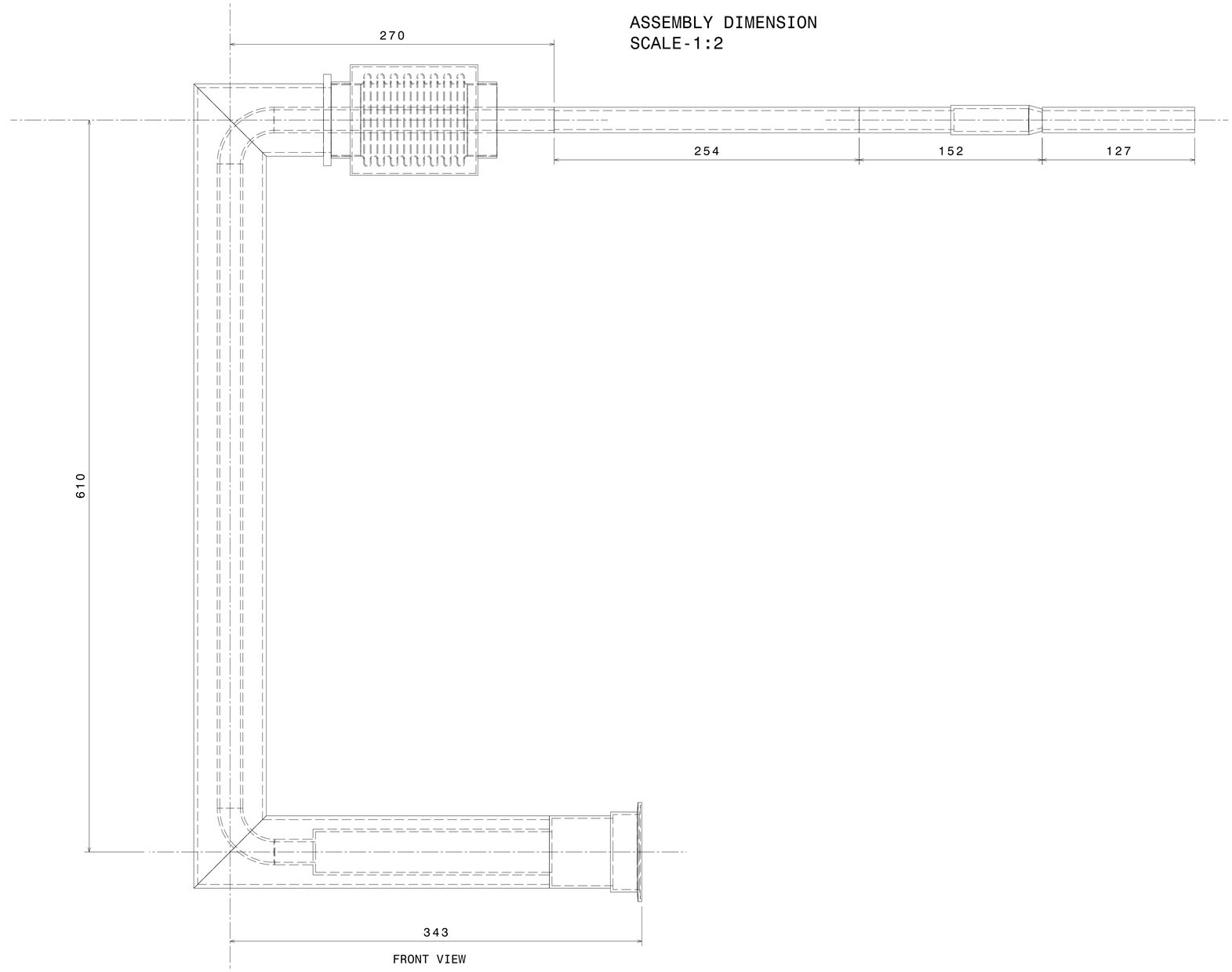

FRONT VIEW

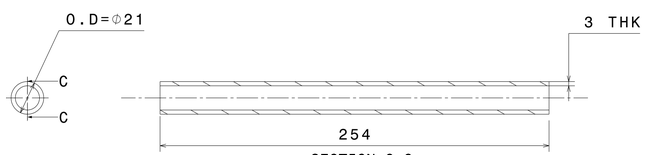

SECTION C-C

3 SS TUBE
SCALE-1:2

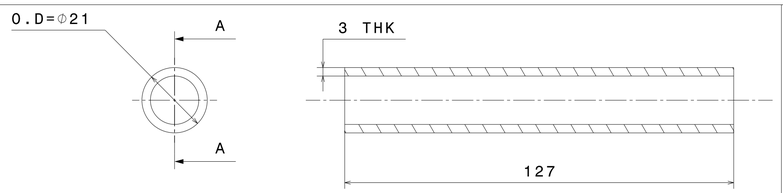

FRONT VIEW

SECTION A-A

1 ALU TUBE
SCALE-1:1

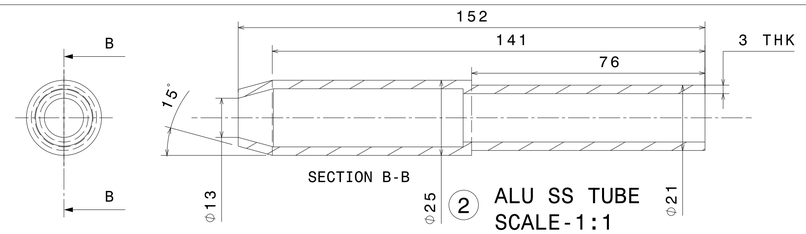

FRONT VIEW

SECTION B-B

2 ALU SS TUBE
SCALE-1:1

MATERIAL:	▽ 8-25	▽▽ 1.6-8	▽▽▽ 0.025-1.6	▽▽▽▽ < 0.025
CO-ORDINATED BY				

MACHINING DEVIATIONS FOR NON-TOLERANCED DIMENSIONS

LENGTH IN mm OF SHORTER SIDE OF ANGLES				LENGTH OR DIA	UPTO 6	6-30	30-120	120-315
UPTO 10	10-50	50-120	OVER 120-400					
±1'	±0°-30'	±0°-20'	±0°-10'		±0.1	±0.2	±0.3	±0.5

REVISION COLUMN

REV	ZONE	DESCRIPTION	DATE	REMARKS	APPROVED BY

MED	SIZE A1	INSTITUTE FOR PLASMA RESEARCH (LIGO-INDIA) BHAT, GANDHINAGAR-382 428.	
ALL DIMENSIONS ARE IN 'mm' UNLESS OTHERWISE STATED			
SCALE	AS NOTED	DATE	TITLE LN2 INLET LINE
DRAWN	S.P.P.	05/07/2015	THIRD ANGLE PROJECTION
CHECKED	R.K.		
APPROVED	M.K.G.		
REF DRG NO:	VCP01-001-R1		REV R1
DRG.NO	VCP01-010-R1		SHEET 02 OF 03

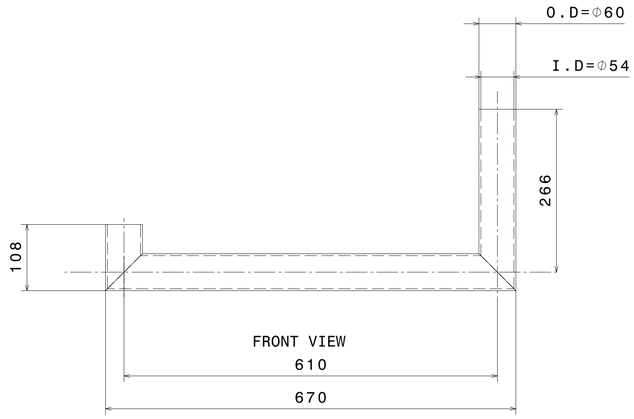

6 TUBE COVER
SCALE-1:5

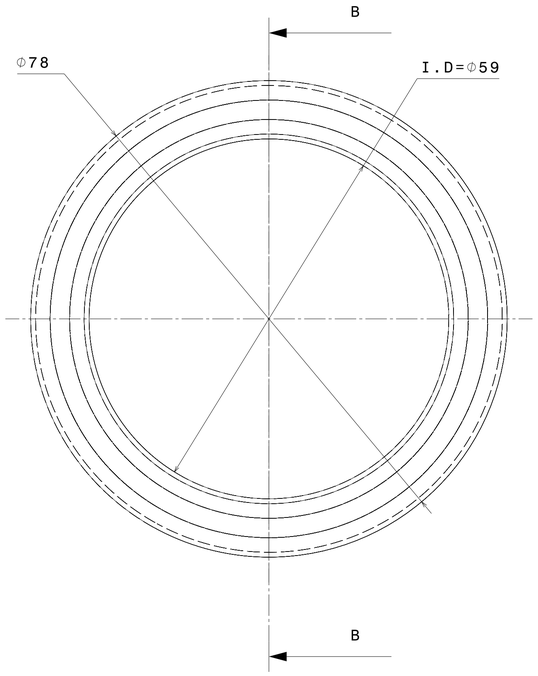

FRONT VIEW

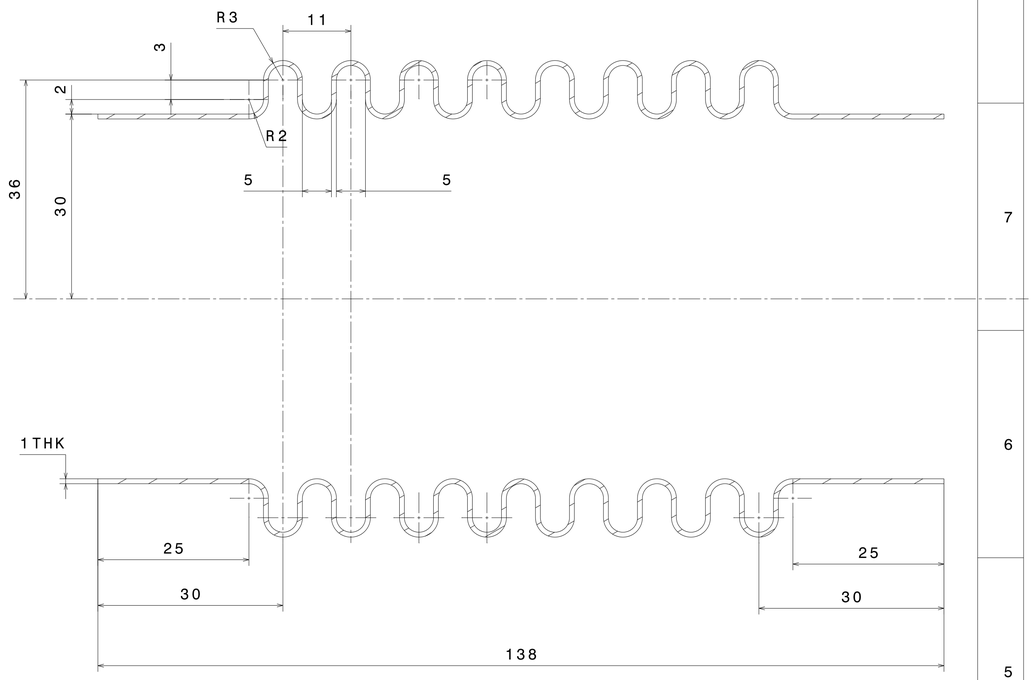

7 BELLOW
SCALE-2:1

SECTION B-B

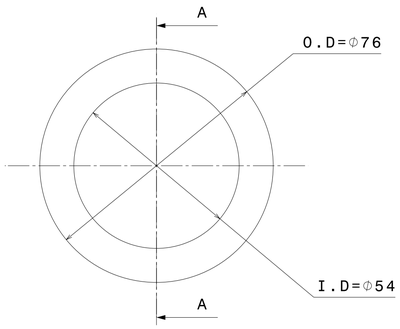

FRONT VIEW

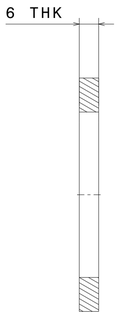

SECTION A-A

9 CONNECTOR
SCALE-1:1

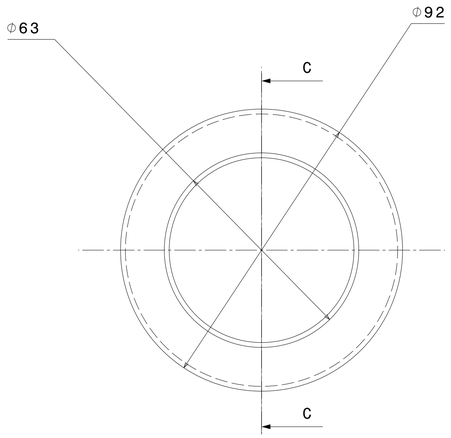

FRONT VIEW

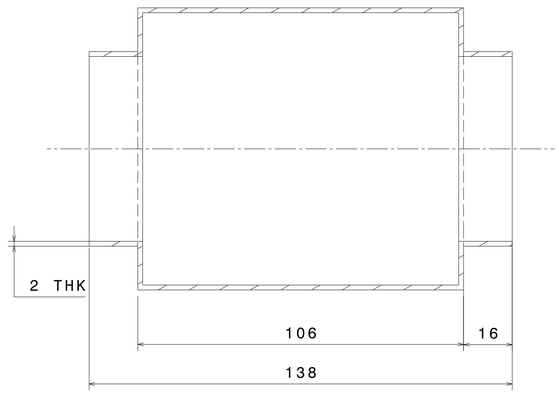

SECTION C-C

8 BELLOW COVER
SCALE-1:1

MATERIAL:	▽ 8-25	▽▽ 1.6-8	▽▽▽ 0.025-1.6	▽▽▽▽ < 0.025
CO-ORDINATED BY				

MACHINING DEVIATIONS FOR NON-TOLERANCED DIMENSIONS

LENGTH IN mm OF SHORTER SIDE OF ANGLES				LENGTH OR DIA	UPTO 6	6-30	30-120	120-315
UPTO 10	10-50	50-120	OVER 120-400					
±1°	±0°-30'	±0°-20'	±0°-10'		±0.1	±0.2	±0.3	±0.5

REVISION COLUMN					
REV	ZONE	DESCRIPTION	DATE	REMARKS	APPROVED BY

MED	SIZE A1
ALL DIMENSIONS ARE IN 'mm' UNLESS OTHERWISE STATED	
SCALE	AS NOTED
DRAWN	S.P.P. 05/07/2015
CHECKED	R.K.
APPROVED	M.K.G.

THIRD ANGLE PROJECTION

INSTITUTE FOR PLASMA RESEARCH
(LIGO-INDIA)
BHAT, GANDHINAGAR-382 428.

TITLE
LN2 INLET LINE

REF DRG NO: VCP01-001-R1 REV R1

DRG.NO VCP01-010-R1 SHEET 03 OF 03

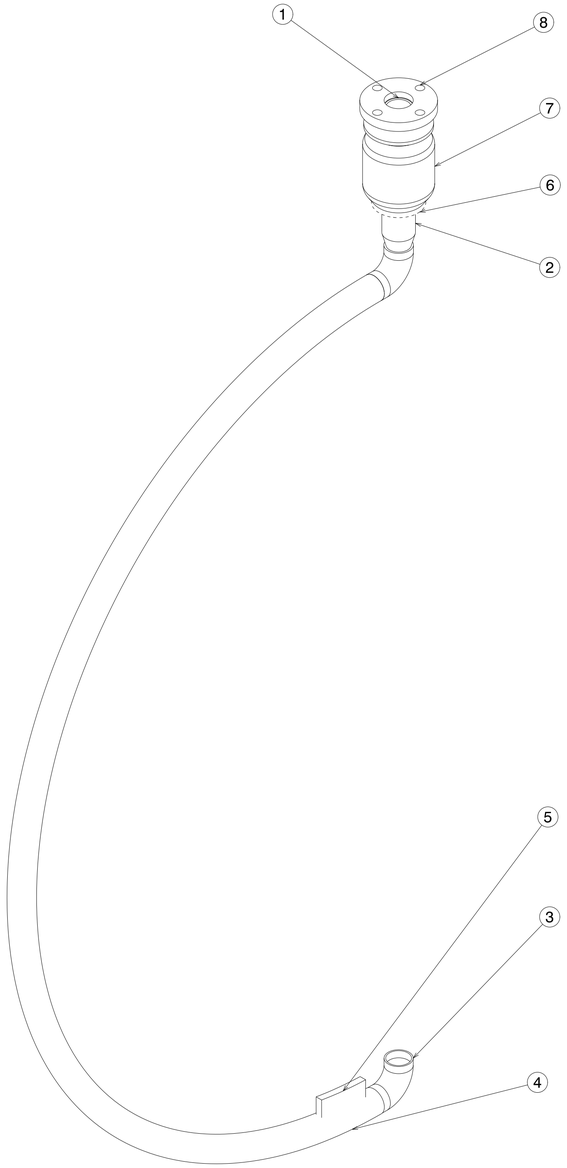

6 GN2 REGENERATION LINE

PART NO.	QUANTITY	PART NAME	MATERIAL	REFERENCE DWG NO.	REMARK
8	01	FLANGE	SS304L	VCP01-011-R1/SHEET-03	-
7	01	BELLOW COVER	SS304L	VCP01-011-R1/SHEET-03	-
6	01	BELLOW	SS304L	VCP01-011-R1/SHEET-03	-
5	01	ALU PLATE	ALUMINIUM	VCP01-011-R1/SHEET-02	-
4	01	TUBE	ALUMINIUM	VCP01-011-R1/SHEET-03	-
3	02	ELBOW	ALUMINIUM	VCP01-011-R1/SHEET-02	-
2	01	ALU-SS TUBE	ALU-SS304L	VCP01-011-R1/SHEET-02	-
1	01	SS TUBE	SS304L	VCP01-011-R1/SHEET-02	-

MATERIAL: ▽ 8-25 ▽▽ 1.6-8 ▽▽▽ 0.025-1.6 ▽▽▽▽ < 0.025

CO-ORDINATED BY

MACHINING DEVIATIONS FOR NON-TOLERANCED DIMENSIONS

LENGTH IN mm OF SHORTER SIDE OF ANGLES				LENGTH OR DIA	UPTO 6	6-30	30-120	120-315
UPTO 10	10-50	50-120	OVER 120-400					
±1'	±0°-30'	±0°-20'	±0°-10'		±0.1	±0.2	±0.3	±0.5

REVISION COLUMN

REV	ZONE	DESCRIPTION	DATE	REMARKS	APPROVED BY

MED | SIZE A1

ALL DIMENSIONS ARE IN mm UNLESS OTHERWISE STATED

SCALE 1:5 | DATE

THIRD ANGLE PROJECTION

DRAWN S.P.P. 05/07/2015

CHECKED R.K.

APPROVED M.K.G.

INSTITUTE FOR PLASMA RESEARCH (LIGO-INDIA)
BHAT, GANDHINAGAR-382 428.

TITLE GN2 REGENERATION LINE

REF DRG NO: VCP01-001-R1 | REV R1

DRG.NO VCP01-011-R1 | SHEET 01 OF 03

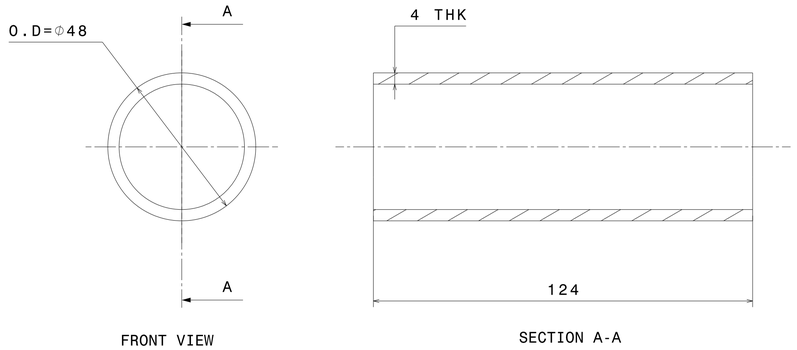

1 SS TUBE
SCALE-1:1

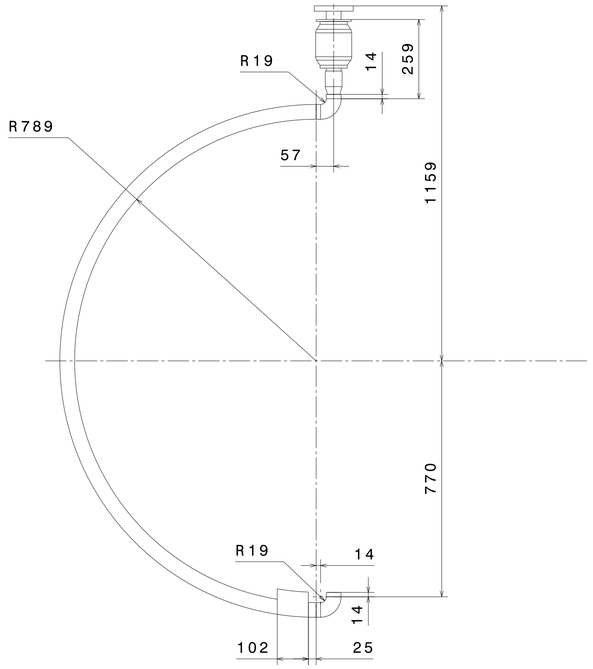

ASSEMBLY DIMENSION
SCALE-1:10

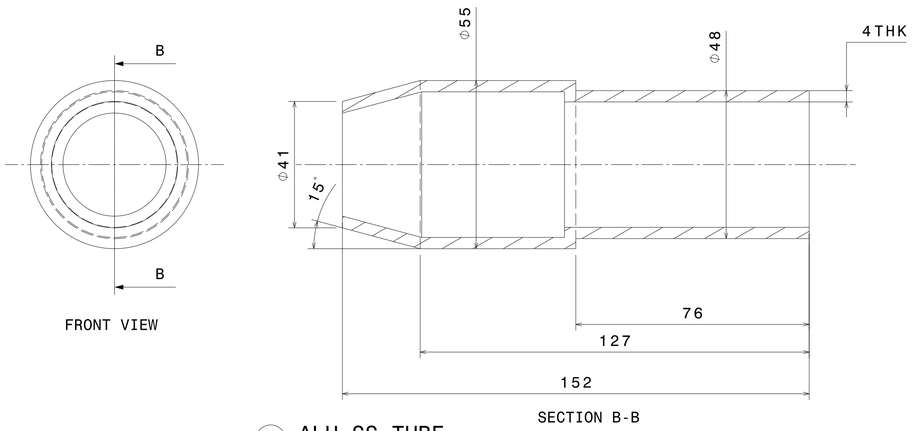

2 ALU-SS TUBE
SCALE-1:1

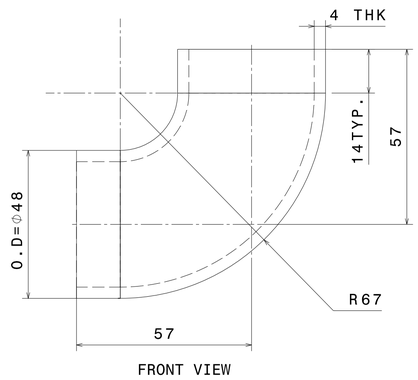

3 ELBOW
SCALE-1:1

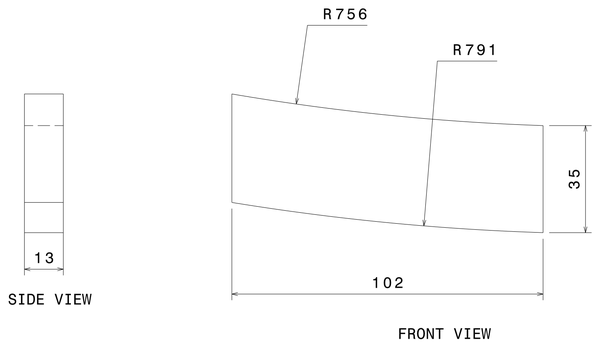

5 ALU PLATE
SCALE-1:1

MATERIAL:	▽ 8-25	▽▽ 1.6-8	▽▽▽ 0.025-1.6	▽▽▽▽ < 0.025				
CO-ORDINATED BY								
MACHINING DEVIATIONS FOR NON-TOLERANCED DIMENSIONS								
LENGTH IN mm OF SHORTER SIDE OF ANGLES				LENGTH OR DIA	UPTO 6	6-30	30-120	120-315
UPTO 10	10-50	50-120	OVER 120-400					
±1°	±0°-30'	±0°-20'	±0°-10'		±0.1	±0.2	±0.3	±0.5

REVISION COLUMN					
REV	ZONE	DESCRIPTION	DATE	REMARKS	APPROVED BY

MED		SIZE A1	
ALL DIMENSIONS ARE IN 'mm' UNLESS OTHERWISE STATED			
SCALE	AS NOTED	DATE	
DRAWN	S.P.P.	05/07/2015	THIRD ANGLE PROJECTION
CHECKED	R.K.		
APPROVED	M.K.G.		

INSTITUTE FOR PLASMA RESEARCH
(LIGO-INDIA)
BHAT, GANDHINAGAR-382 428.

TITLE
GN2 REGENERATION LINE

REF DRG NO: VCP01-001-R1 REV R1

DRG.NO VCP01-011-R1 SHEET 02 OF 03

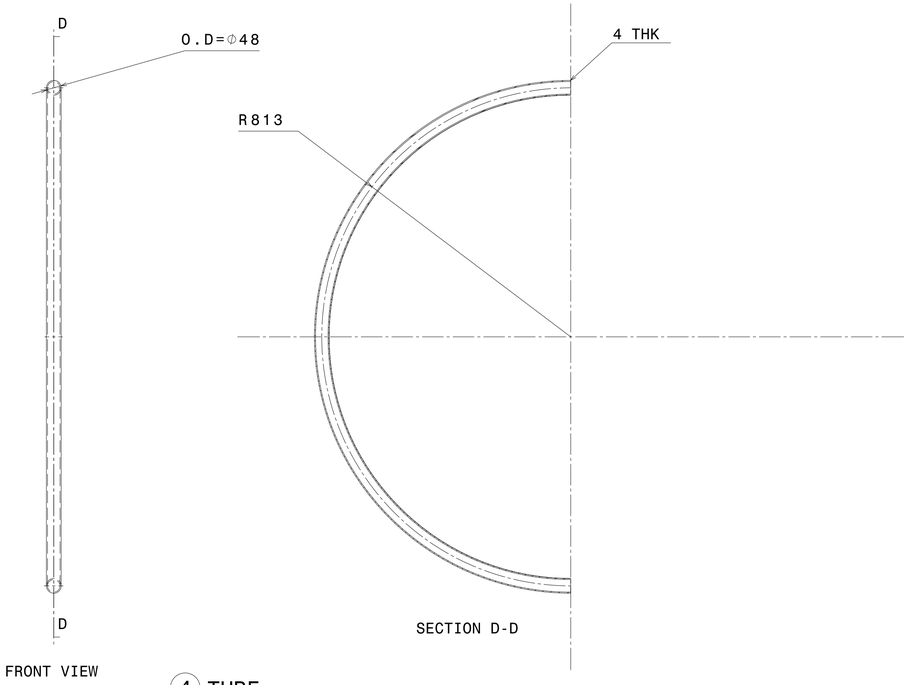

4 TUBE
SCALE1:10

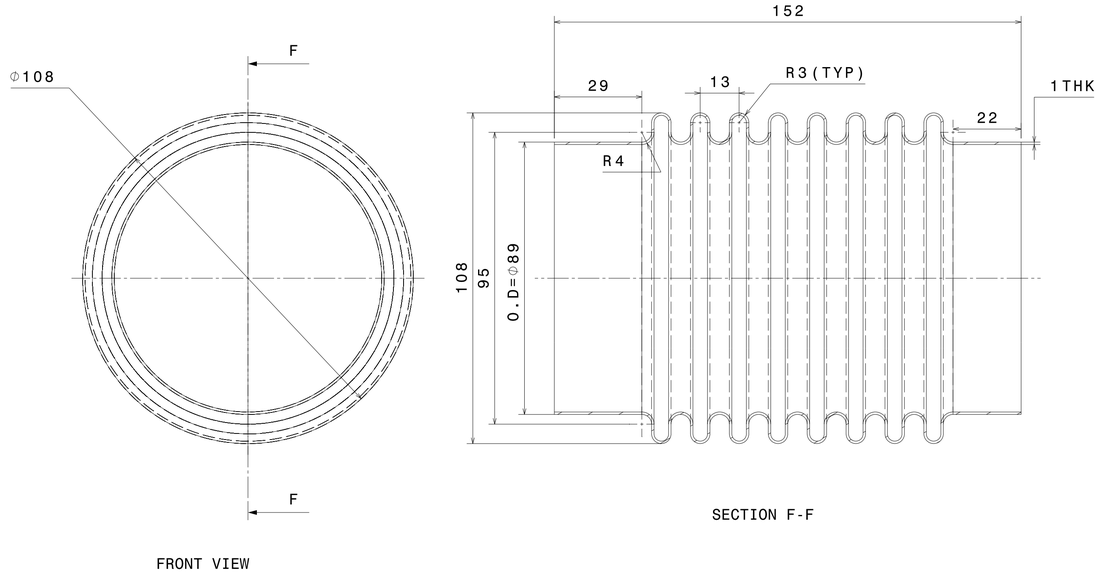

6 BELLOW
SCALE-1:1

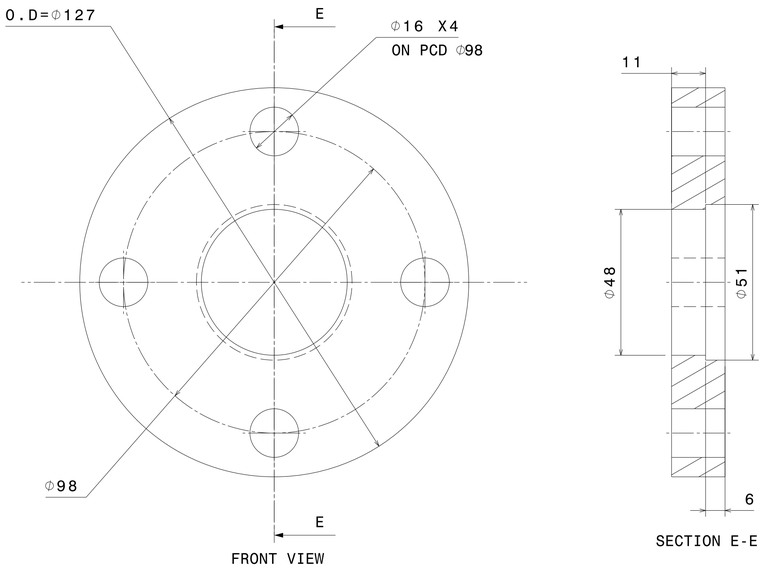

8 FLANGE
SCALE-1:1

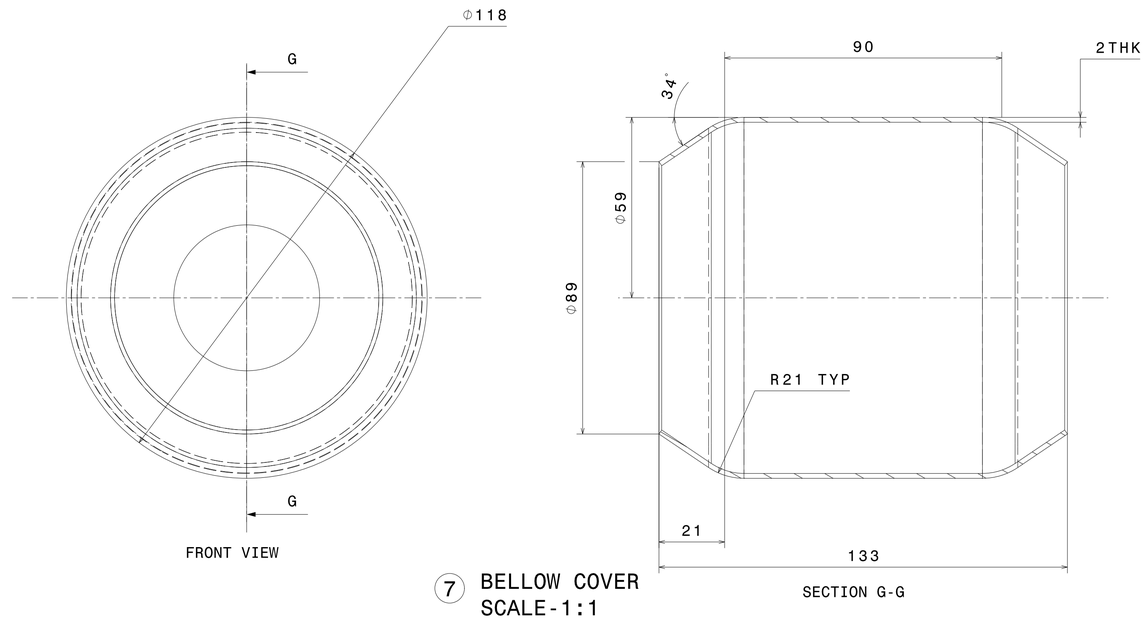

7 BELLOW COVER
SCALE-1:1

MATERIAL:	▽ 8-25	▽▽ 1.6-8	▽▽▽ 0.025-1.6	▽▽▽▽ < 0.025
CO-ORDINATED BY				

MACHINING DEVIATIONS FOR NON-TOLERANCED DIMENSIONS

LENGTH IN mm OF SHORTER SIDE OF ANGLES				LENGTH OR DIA	UPTO 6	6-30	30-120	120-315
UPTO 10	10-50	50-120	OVER 120-400					
±1°	±0°-30'	±0°-20'	±0°-10'		±0.1	±0.2	±0.3	±0.5

REVISION COLUMN

REV	ZONE	DESCRIPTION	DATE	REMARKS	APPROVED BY

MED	SIZE A1	INSTITUTE FOR PLASMA RESEARCH (LIGO-INDIA) BHAT, GANDHINAGAR-382 428.
ALL DIMENSIONS ARE IN mm UNLESS OTHERWISE STATED		
SCALE	AS NOTED	DATE
DRAWN	S.P.P.	05/07/2015
CHECKED	R.K.	
APPROVED	M.K.G.	

THIRD ANGLE PROJECTION

TITLE: GN2 REGENERATION LINE

REF DRG NO: VCP01-001-R1 — REV R1

DRG.NO: VCP01-011-R1 — SHEET 03 OF 03

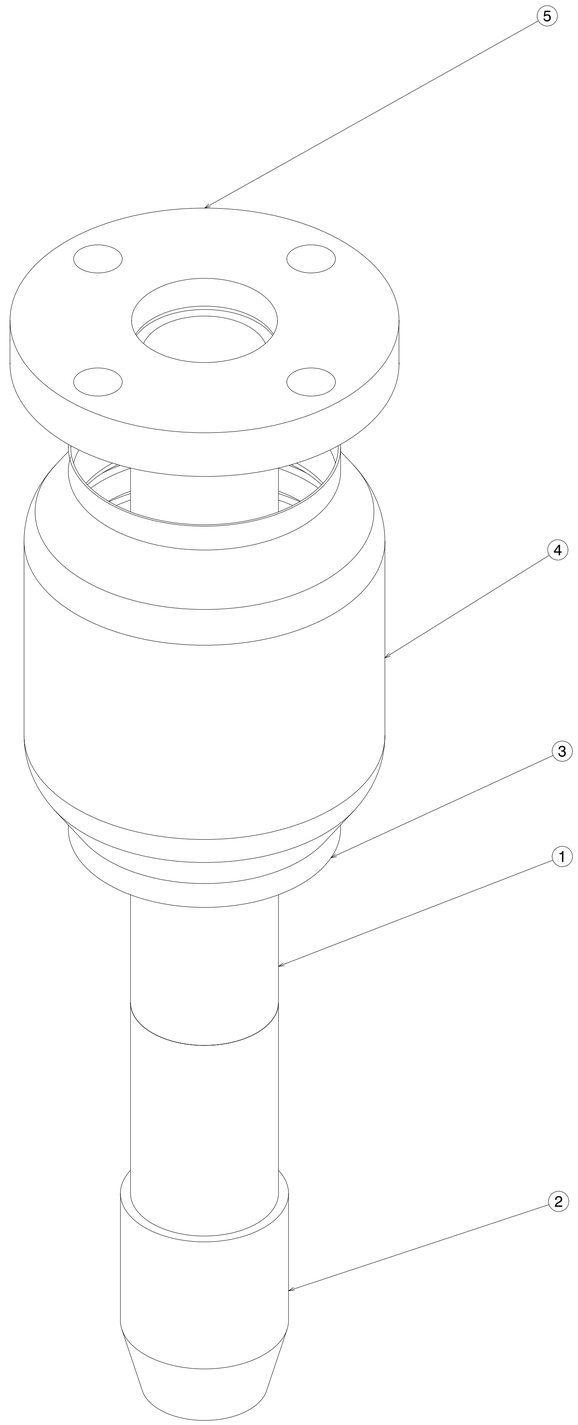

7 GN2 VENT LINE

PART NO.	QUANTITY	PART NAME	MATERIAL	REFERENCE DWG NO.	REMARK
5	01	FLANGE	SS304L	VCP01-012-R1/SHEET-02	-
4	01	BELLOW COVER	SS304L	VCP01-012-R1/SHEET-02	-
3	01	BELLOW	SS304L	VCP01-012-R1/SHEET-02	-
2	01	ALU-SS TUBE	ALU-SS304L	VCP01-012-R1/SHEET-02	-
1	01	SS TUBE	SS304L	VCP01-012-R1/SHEET-02	-

MATERIAL: ▽ 8-25 ▽▽ 1.6-8 ▽▽▽ 0.025-1.6 ▽▽▽▽ < 0.025

CO-ORDINATED BY

MACHINING DEVIATIONS FOR NON-TOLERANCED DIMENSIONS

LENGTH IN mm OF SHORTER SIDE OF ANGLES				LENGTH OR DIA	UPTO 6	6-30	30-120	120-315
UPTO 10	10-50	50-120	OVER 120-400					
±1'	±0°-30'	±0°-20'	±0°-10'		±0.1	±0.2	±0.3	±0.5

REVISION COLUMN

REV	ZONE	DESCRIPTION	DATE	REMARKS	APPROVED BY

MED | SIZE A1

ALL DIMENSIONS ARE IN 'mm' UNLESS OTHERWISE STATED

INSTITUTE FOR PLASMA RESEARCH (LIGO-INDIA) BHAT, GANDHINAGAR-382 428.

SCALE	1:1	DATE	
DRAWN	S.P.P.	04/07/2015	THIRD ANGLE PROJECTION
CHECKED	R.K.		
APPROVED	M.K.G.		

TITLE: GN2 VENT LINE

REF DRG NO: VCP01-001-R1 REV R1

DRG.NO VCP01-012-R1 SHEET 01 OF 02

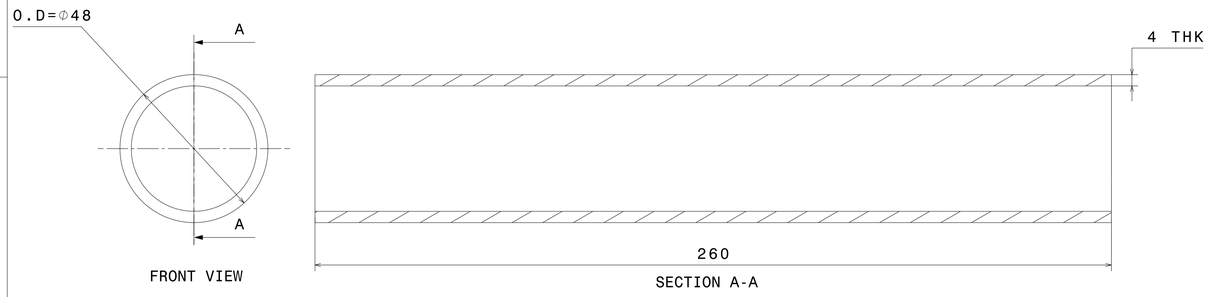

1 SS TUBE
SCALE-1:1

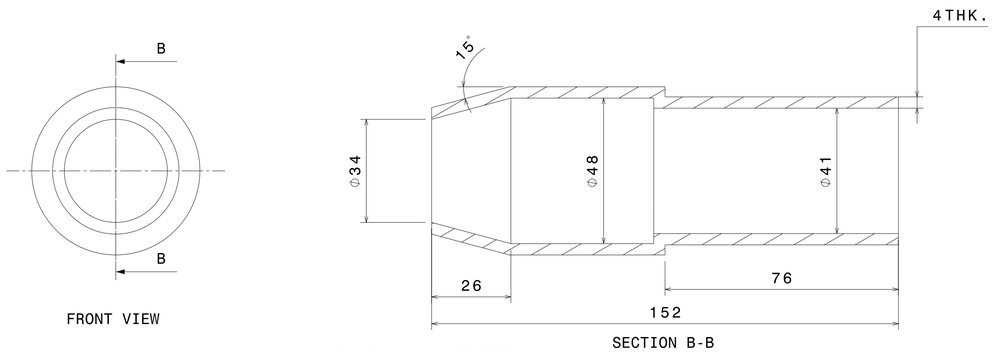

2 ALU-SS TUBE
SCALE-1:1

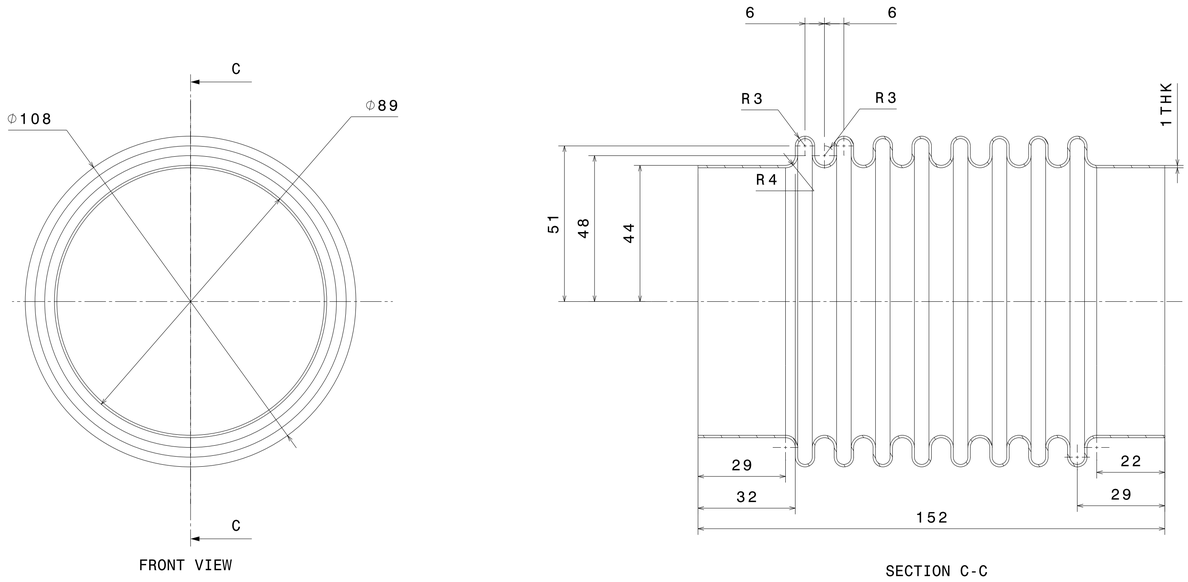

3 BELLOW
SCALE-1:1

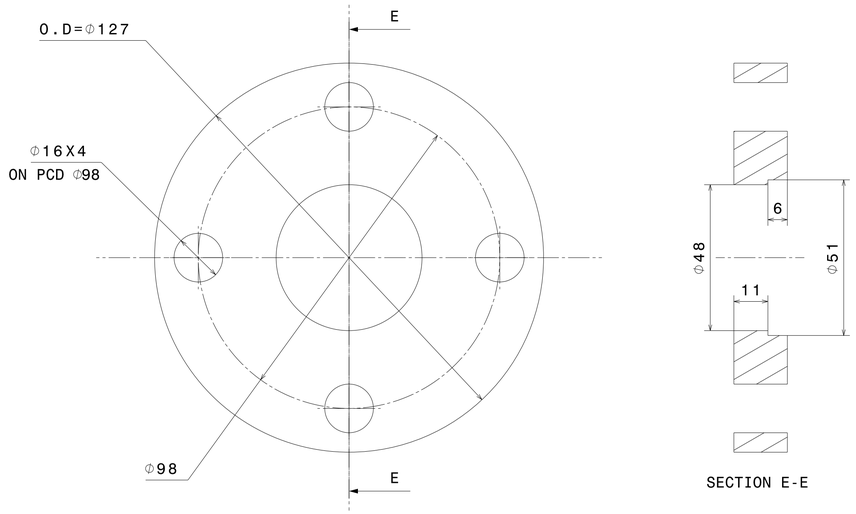

5 FLANGE
SCALE-1:1

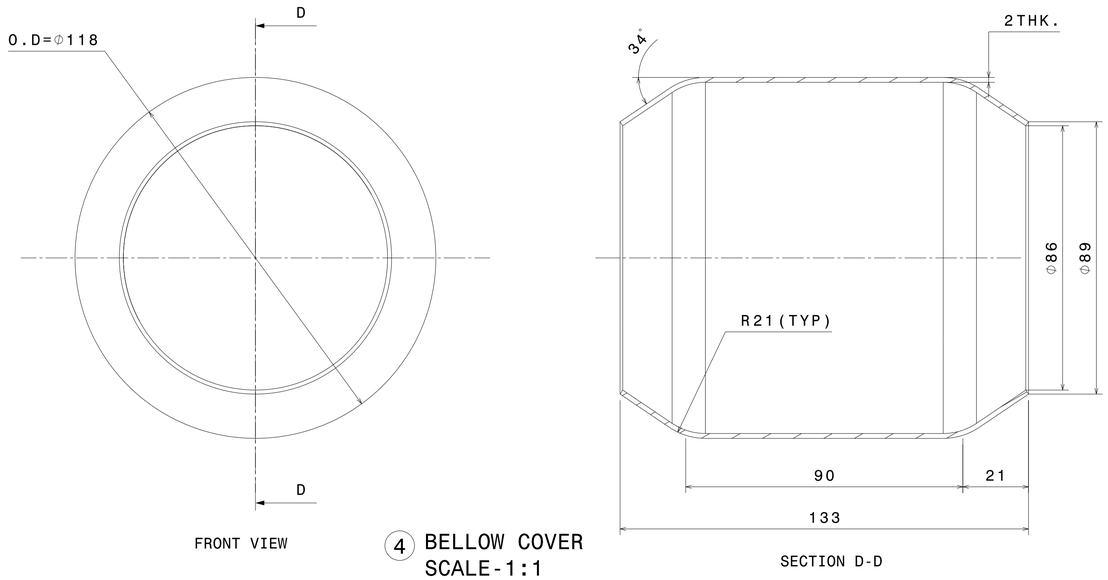

4 BELLOW COVER
SCALE-1:1

MATERIAL:		▽ 8-25	▽▽ 1.6-8	▽▽▽ 0.025-1.6	▽▽▽▽ < 0.025				REVISION COLUMN						MED	SIZE A1	INSTITUTE FOR PLASMA RESEARCH (LIGO-INDIA) BHAT, GANDHINAGAR-382 428.		
CO-ORDINATED BY									REV	ZONE	DESCRIPTION	DATE	REMARKS	APPROVED BY	ALL DIMENSIONS ARE IN mm' UNLESS OTHERWISE STATED				
MACHINING DEVIATIONS FOR NON-TOLERANCED DIMENSIONS															SCALE	AS NOTED	DATE	TITLE	
LENGTH IN mm OF SHORTER SIDE OF ANGLES					LENGTH OR DIA	UPTO 6	6-30	30-120	120-315						DRAWN	S.P.P.	04/07/2015	GN2 VENT LINE	
UPTO 10	10-50	50-120	OVER 120-400												CHECKED	R.K.		REF DRG NO: VCP01-001-R1	REV R1
±1'	±0°-30'	±0°-20'	±0°-10'			±0.1	±0.2	±0.3	±0.5						APPROVED	M.K.G.		DRG.NO VCP01-012-R1	SHEET 02 OF 02

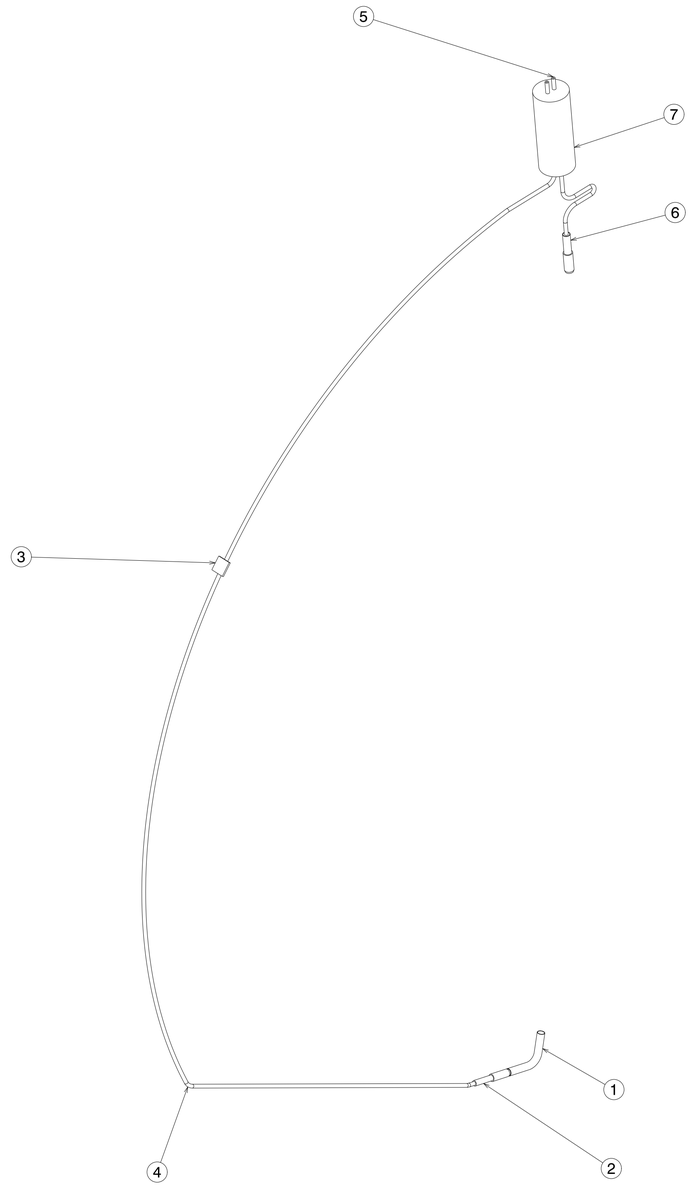

8 LN2 LEVEL CONTROL LINE

PART NO.	QUANTITY	PART NAME	MATERIAL	REFERENCE DWG NO.	REMARK
7	01	END TUBE	SS304L	VCP01-013-R1/SHEET-03	-
6	01	ALU-SS TUBE-2	ALU-SS304L	VCP01-013-R1/SHEET-03	-
5	01	TUBE-1	SS304L	VCP01-013-R1/SHEET-03	-
4	01	TUBE	SS304L	VCP01-013-R1/SHEET-02	-
3	01	SUPPORT PLATE	SS304L	VCP01-013-R1/SHEET-02	-
2	01	ALU-SS TUBE-1	ALU-SS304L	VCP01-013-R1/SHEET-02	-
1	01	TUBE	ALUMINIUM	VCP01-013-R1/SHEET-02	-

MATERIAL: ▽ 8-25 | ▽▽ 1.6-8 | ▽▽▽ 0.025-1.6 | ▽▽▽▽ < 0.025

CO-ORDINATED BY

MACHINING DEVIATIONS FOR NON-TOLERANCED DIMENSIONS

LENGTH IN mm OF SHORTER SIDE OF ANGLES				LENGTH OR DIA	UPTO 6	6-30	30-120	120-315
UPTO 10	10-50	50-120	OVER 120-400					
±1'	±0°-30'	±0°-20'	±0°-10'		±0.1	±0.2	±0.3	±0.5

REVISION COLUMN

REV	ZONE	DESCRIPTION	DATE	REMARKS	APPROVED BY

MED | SIZE A1

ALL DIMENSIONS ARE IN 'mm' UNLESS OTHERWISE STATED

SCALE 1:5 | DATE

DRAWN S.P.P. 05/07/2015

CHECKED R.K.

APPROVED M.K.G.

THIRD ANGLE PROJECTION

INSTITUTE FOR PLASMA RESEARCH
(LIGO-INDIA)
BHAT, GANDHINAGAR-382 428.

TITLE
LN2 LEVEL CONTROL LINE

REF DRG NO: VCP01-001-R1 | REV R1

DRG.NO VCP01-013-R1 | SHEET 01 OF 03

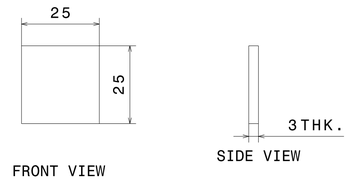

③ SUPPORT PLATE
SCALE-1:1

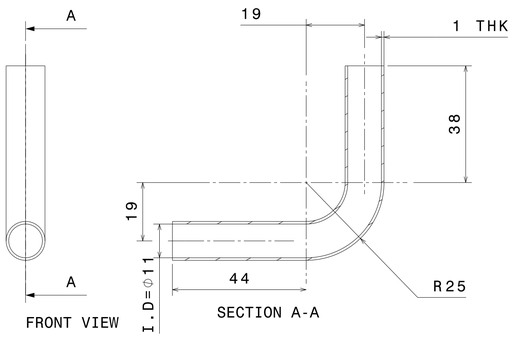

① TUBE
SCALE-1:1

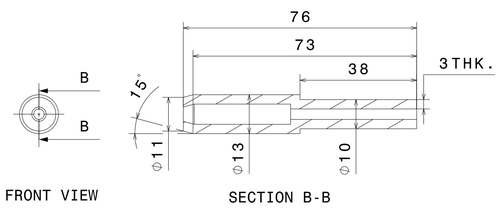

② ALU-SS TUBE-1
SCALE-1:1

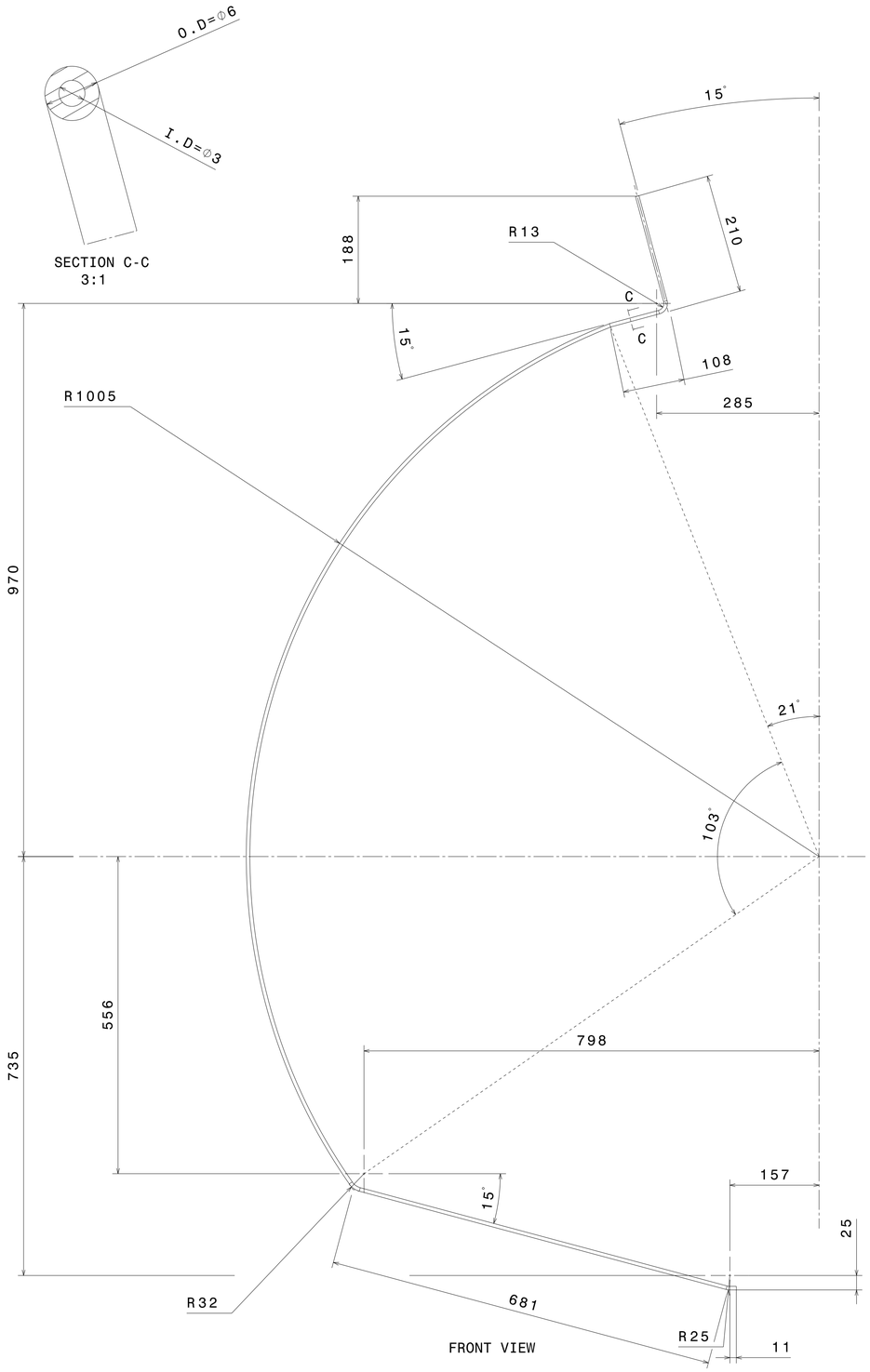

④ TUBE
SCALE-1:5

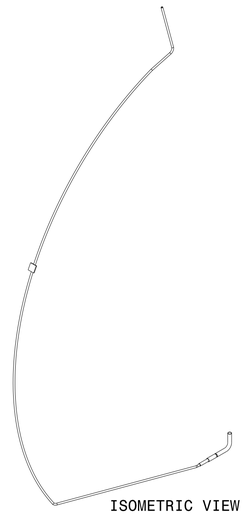

ISOMETRIC VIEW
SCALE-1:10

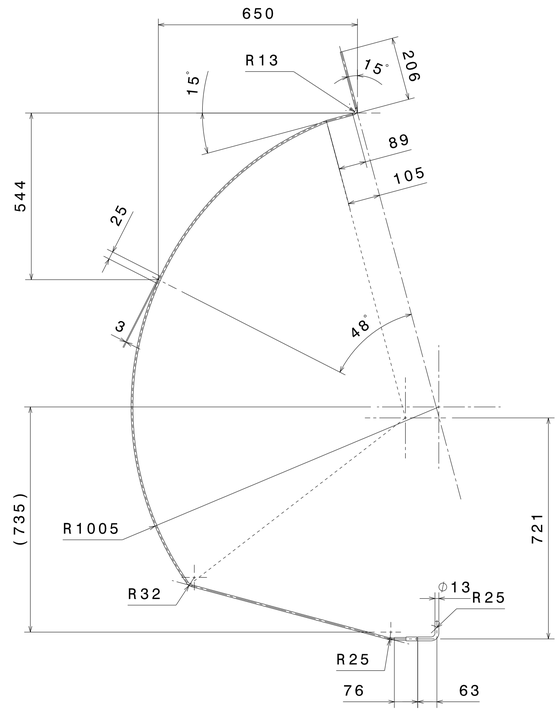

ASSEMBLY DIMENSION
SCALE-1:10

MATERIAL:	▽ 8-25	▽▽ 1.6-8	▽▽▽ 0.025-1.6	▽▽▽▽ < 0.025
CO-ORDINATED BY				

MACHINING DEVIATIONS FOR NON-TOLERANCED DIMENSIONS

LENGTH IN mm OF SHORTER SIDE OF ANGLES				LENGTH OR DIA	UPTO 6	6-30	30-120	120-315
UPTO 10	10-50	50-120	OVER 120-400					
±1'	±0°-30'	±0°-20'	±0°-10'		±0.1	±0.2	±0.3	±0.5

REVISION COLUMN					
REV	ZONE	DESCRIPTION	DATE	REMARKS	APPROVED BY

MED	SIZE A1
ALL DIMENSIONS ARE IN 'mm' UNLESS OTHERWISE STATED	
SCALE	AS NOTED
DRAWN	S.P.P. 05/07/2015
CHECKED	R.K.
APPROVED	M.K.G.

THIRD ANGLE PROJECTION

INSTITUTE FOR PLASMA RESEARCH
(LIGO-INDIA)
BHAT, GANDHINAGAR-382 428.

TITLE
LN2 LEVEL CONTROL LINE

REF DRG NO: VCP01-001-R1 REV R1

DRG.NO VCP01-013-R1 SHEET 02 OF 03

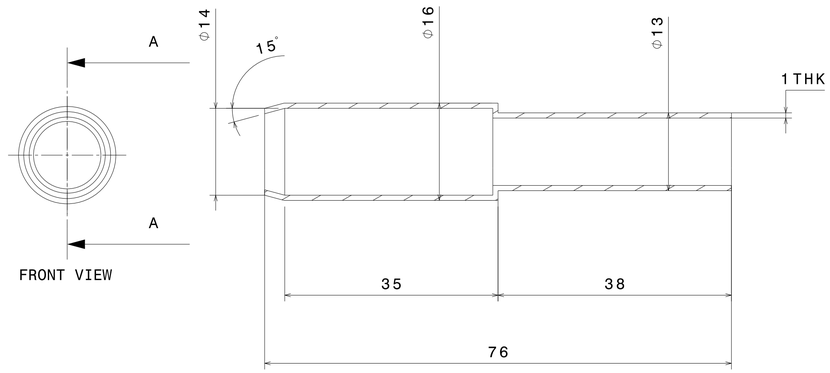

6 ALU SS TUBE-2
SCALE-2:1

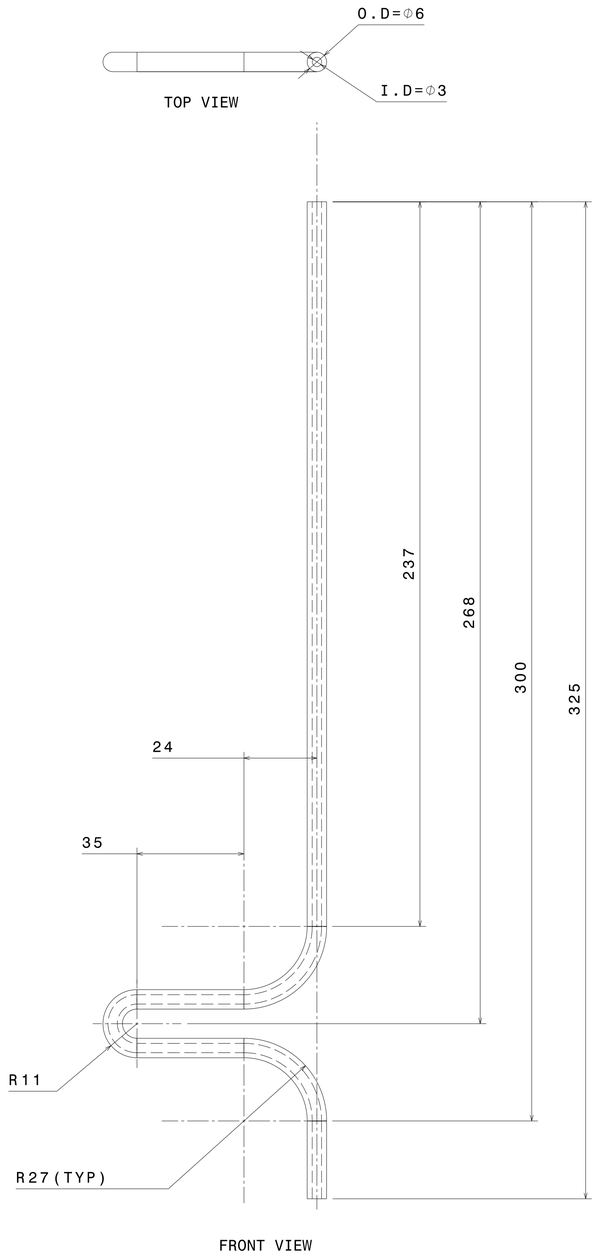

5 TUBE-1
SCALE-1:1

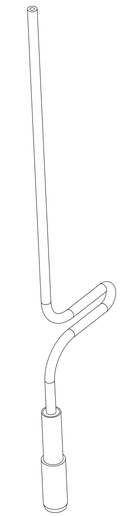

ISOMETRIC VIEW
SCALE-1:2

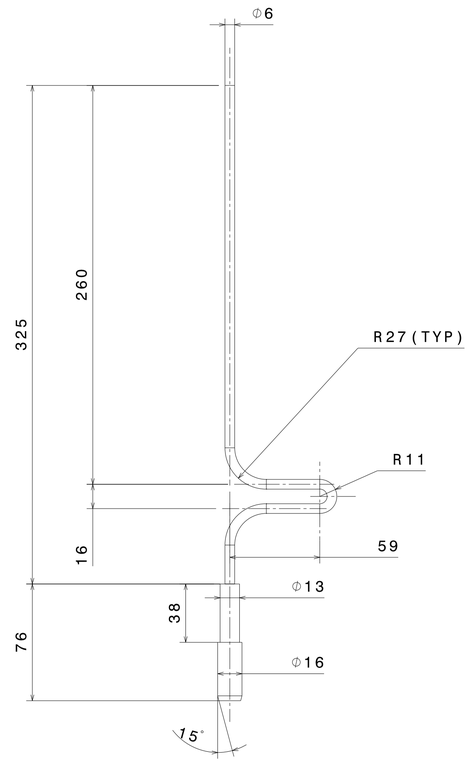

ASSEMBLY DIMENSION
SCALE-1:2

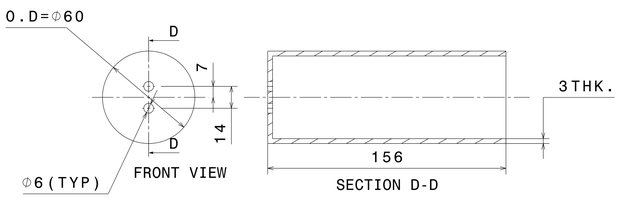

7 END TUBE
SCALE-1:2

MATERIAL:	▽ 8-25	▽▽ 1.6-8	▽▽▽ 0.025-1.6	▽▽▽▽ < 0.025
CO-ORDINATED BY				

MACHINING DEVIATIONS FOR NON-TOLERANCED DIMENSIONS

LENGTH IN mm OF SHORTER SIDE OF ANGLES				LENGTH OR DIA	UPTO 6	6-30	30-120	120-315
UPTO 10	10-50	50-120	OVER 120-400					
±1'	±0°-30'	±0°-20'	±0°-10'		±0.1	±0.2	±0.3	±0.5

REVISION COLUMN

REV	ZONE	DESCRIPTION	DATE	REMARKS	APPROVED BY

MED	SIZE A1
ALL DIMENSIONS ARE IN 'mm' UNLESS OTHERWISE STATED	
SCALE	AS NOTED
DATE	
DRAWN	S.P.P. 05/07/2015
CHECKED	R.K.
APPROVED	M.K.G.

THIRD ANGLE PROJECTION

INSTITUTE FOR PLASMA RESEARCH
(LIGO-INDIA)
BHAT, GANDHINAGAR-382 428.

TITLE
LN2 LEVEL CONTROL LINE

REF DRG NO: VCP01-001-R1 REV R1

DRG.NO VCP01-013-R1 SHEET 03 OF 03

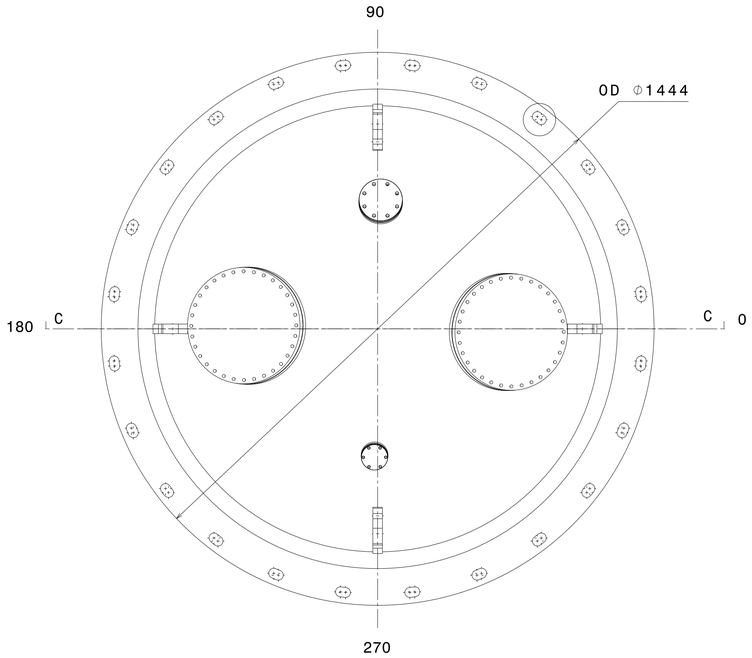

FRONT VIEW
SCALE (1:8)

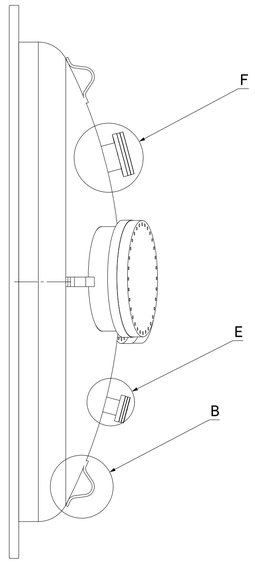

FRONT VIEW
SCALE (1:8)

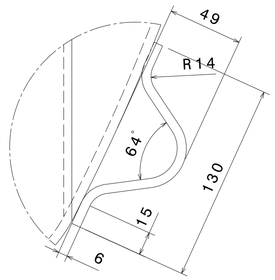

LIFTING LUG
DETAIL VIEW B
SCALE (1:2)

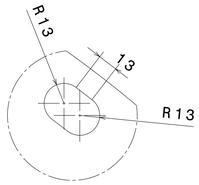

SLOTTED
BOLTDETAIL
VIEW A SCALE
(1:2)

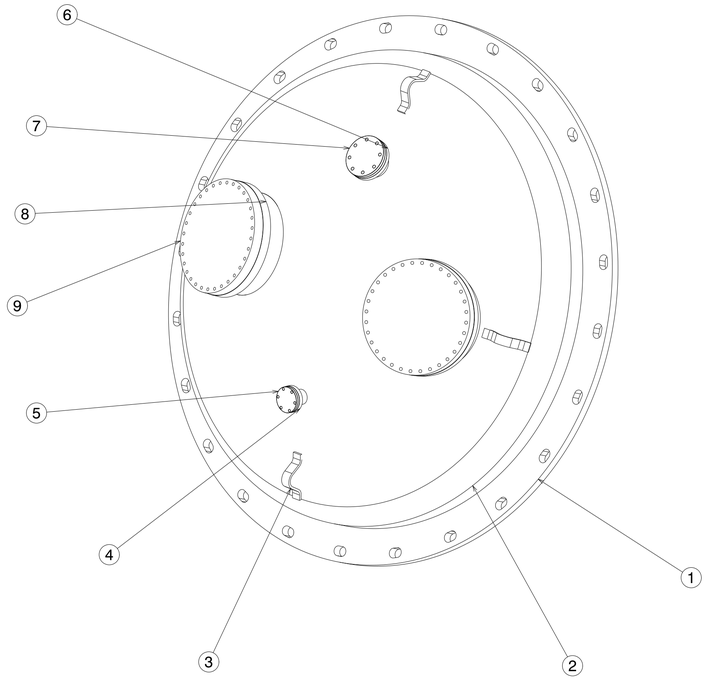

ISOMETRIC VIEW

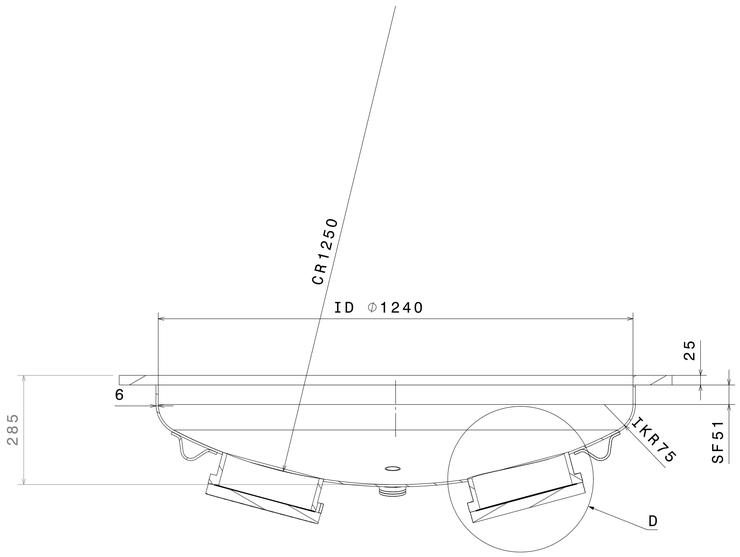

SECTION VIEW C-C

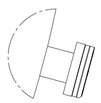

35 CF PORT
DETAIL VIEW E
SCALE (1:4)

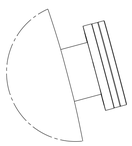

63CF PORT
DETAIL VIEW F
SCALE (1:4)

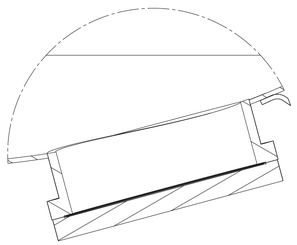

250 CF PORT
DETAIL VIEW D
SCALE (1:4)

PART NO	QUANTITY	PART NAME	MATERIAL	REF DWG NO	REMARK
9	2	250CF COVER FLANGE	SS316L	STANDARD	-
8	2	250CF FLANGE WITH NECK	SS316L	STANDARD	-
7	1	63CF BLANK FLANGE	SS316L	STANDARD	-
6	1	63CF FLANGE WITH NECK	SS316L	STANDARD	-
5	1	35CF COVER FLANGE	SS316L	STANDARD	-
4	1	35CF FLANGE WITH NECK	SS316L	STANDARD	-
3	4	LIFTING LUG	SS304L	-	-
2	1	DISHED HEAD	SS304L	-	-
1	1	FLAT FLANGE	SS304L	-	-

DRG.NO	▽ 8-25	▽▽ 1.6-8	▽▽▽ 0.025-1.6	▽▽▽▽ < 0.025
CO-ORDINATED BY				

MACHINING DEVIATIONS FOR NON-TOLERANCED DIMENSIONS

LENGTH IN mm OF SHORTER SIDE OF ANGLES				LENGTH OR DIA	UPTO 6	6-30	30-120	120-315
UPTO 10	10-50	50-120	OVER 120-400					
±1°	±0°-30'	±0°-20'	±0°-10'		±0.1	±0.2	±0.3	±0.5

REV	ZONE	DESCRIPTION	DATE	REMARKS	APPROVED BY

REVISION COLUMN

ASS'Y GROUP:	SIZE A1	
ALL DIMENSIONS ARE IN 'mm' UNLESS OTHERWISE STATED		
SCALE	AS NOTED	DATE
DRAWN	R.K	25/01/2021
CHECKED	N.C.G	
APPROVED	V.B	

THIRD ANGLE PROJECTION

INSTITUTE FOR PLASMA RESEARCH
(LIGO-INDIA)
BHAT, GANDHINAGAR-382 428.

TITLE
DISH END ASSEMBLY

REF DRG NO: VCP01-001-R3 REV R0

DRG.NO VCP01-014-R0 SHEET 01 OF 01

(1:5)

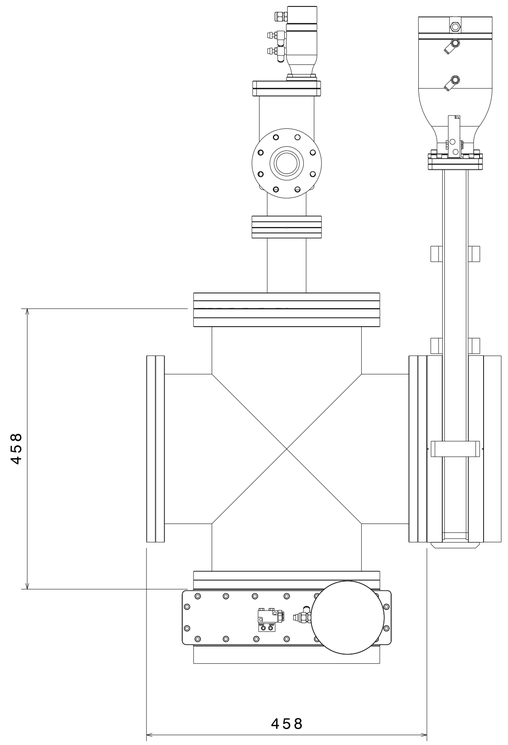

FRONT VIEW

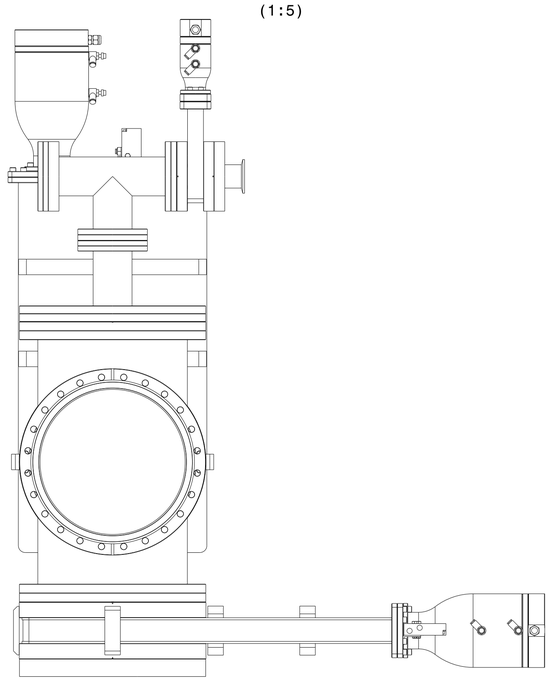

SIDE VIEW

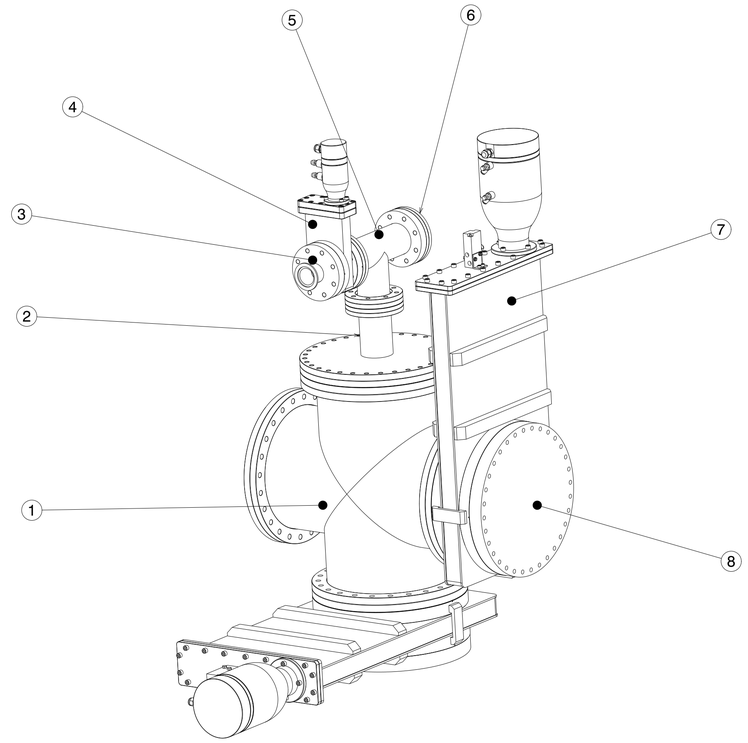

ISOMETRIC VIEW

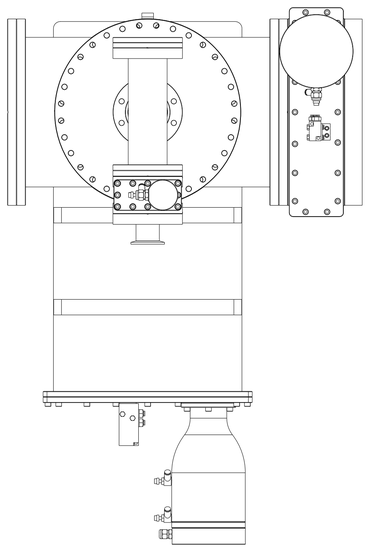

TOP VIEW

PART NO	QUANTITY	PART NAME	MATERIAL	REF DWG NO	REMARK
8	2	250CF COVER FLANGE	-	STANDARD	-
7	2	250CF GATE VALVE	-	STANDARD	-
6	1	63CF COVER FLANGE	-	STANDARD	-
5	1	63 CF T FITTING	-	STANDARD	-
4	1	63CF GATE VALVE	-	STANDARD	-
3	1	63CF-35KF ADAPTER	-	STANDARD	-
2	1	250CF TO 63CF ADAPTER	-	STANDARD	-
1	1	250CF BLANK CROSS	-	STANDARD	-

DRG.NO	▽ 8-25	▽▽ 1.6-8	▽▽▽ 0.025-1.6	▽▽▽▽ < 0.025
CO-ORDINATED BY				

MACHINING DEVIATIONS FOR NON-TOLERANCED DIMENSIONS

LENGTH IN mm OF SHORTER SIDE OF ANGLES				LENGTH OR DIA	UPTO 6	6-30	30-120	120-315
UPTO 10	10-50	50-120	OVER 120-400					
±1'	±0'-30'	±0'-20'	±0'-10'		±0.1	±0.2	±0.3	±0.5

REVISION COLUMN					
REV	ZONE	DESCRIPTION	DATE	REMARKS	APPROVED BY

ASS'Y GROUP:

SIZE A1

ALL DIMENSIONS ARE IN 'mm' UNLESS OTHERWISE STATED

INSTITUTE FOR PLASMA RESEARCH (LIGO-INDIA) BHAT, GANDHINAGAR-382 428.

SCALE	1:5	DATE	
DRAWN	R.K	01/02/2021	THIRD ANGLE PROJECTION
CHECKED	N.C.G		
APPROVED	V.B		

TITLE: 250CF CROSS ASSEMBLY

REF DRG NO: VCP01-001-R3 REV R0

DRG.NO VCP01-015-R0 SHEET 01 OF 01